This drawing is confidential and must not be reproduced or used without the consent of EXM

Ce dessin est confidentiel et ne doit pas être reproduit ou utilisé sans le consentement de EXM

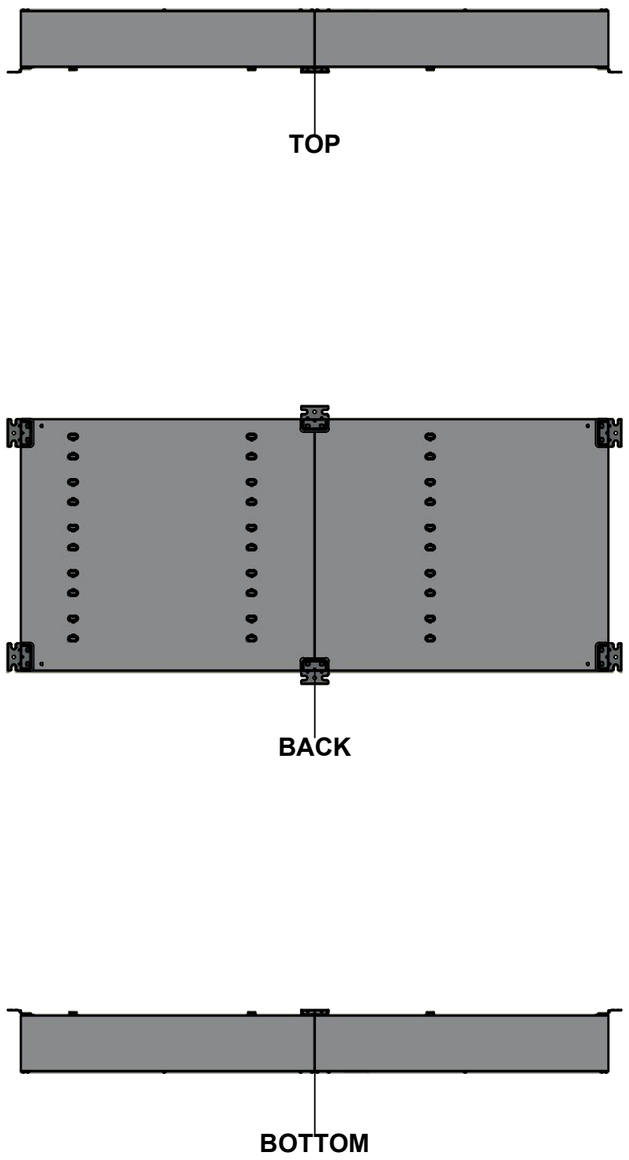

No.	Revisions	Date	By/Par

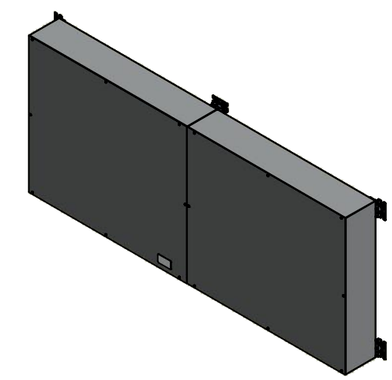

Isometric View

Tél: (450) 979-4373
Fax: (450) 979-4626
www.exmweb.com

Flatness / Aplatissement: Max 3.0mm

Projection

Customer / Client		Date	
Drawn By / Dessiné Par	BoxCad: BoxCad	Date	02-Aug-22
Material / Matière	14 Ga Cold Rolled A1008 CS Type B (1.7mm)		
Color / Couleur	Asa-61 Grey	Finish / Fini	Smooth
Description	1100BTCU 600A - 5Wires x 84" Assembly	Detail Rev.	
Part Number / Numéro Pièce	**1100BTCU07605**	Rev.	**0**

SEE BILL OF MATERIAL ON LAST PAGE

This drawing is confidential and must not be reproduced or used without the consent of Eurobex

Ce dessin est confidentiel et ne doit pas être reproduit ou utilisé sans le consentement de Eurobex

STANDARD FEATURES ARE NOT LISTED IN THIS HOLE TABLE

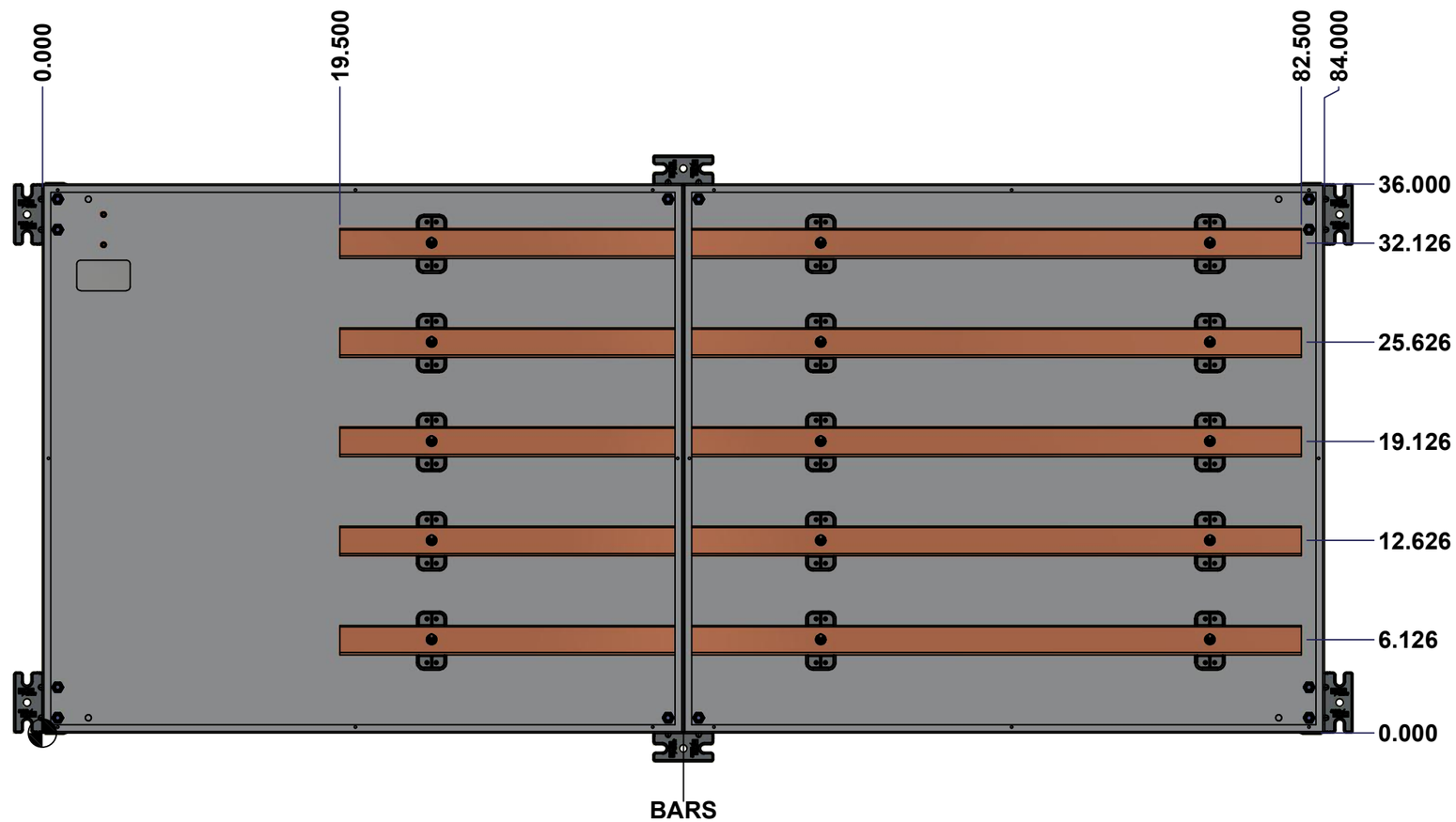

Y+ / X- X+ / Y-	Description 1100BTCU 600A - 5Wires x 84" Assembly	Status (NULL)
	Part Number Numéro Pièce **1100BTCU07605**	Rev. **0**

This drawing is confidential and must not be reproduced or used without the consent of EXM

Ce dessin est confidentiel et ne doit pas être reproduit ou utilisé sans le consentement de EXM

NOTE

ITEM	DESCRIPTION
1	NEMA 1 Enclosure
2	C/W Standard ground studs on box and cover
3	W/O Standard door stiffener
4	W/O Inner panel
5	W/O Inner panel mounting studs

No.	Revisions	Date	By/Par

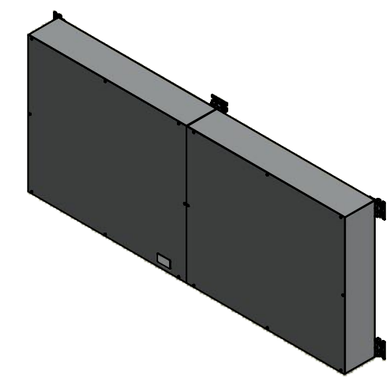

Isometric View

PACKING

ITEM	QTY	DESCRIPTION
Cardboard sleeve	2	Top and Bottom
Cardboard strip	2	Between back of enclosure and inner panel
Plastic bag	1	To protect cover surface and inside gasket
Cardboard corner	4	To reinforced for the plastic strap tightening
Plastic strap - Black	2	To Squeeze 2 cardboard sleeve together
Packaging label	3	White label with PN
Plastic strap- Green	2	To secure the enclosure to the wood pallet
Wood Pallet	1	2" deeper and 3" larger than enclosure size

Parts List

Qty	Part Number	Rev	Description
1	1100BTCU07605BAR5-P	0	Rounded Edge Copper Bar 1/4" x 2"
1	1100BTCU07605BAR4-P	0	Rounded Edge Copper Bar 1/4" x 2"
1	1100BTCU07605BAR3-P	0	Rounded Edge Copper Bar 1/4" x 2"
1	1100BTCU07605BAR2-P	0	Rounded Edge Copper Bar 1/4" x 2"
1	1100BTCU07605BAR1-P	0	Rounded Edge Copper Bar 1/4" x 2"
15	STK-Q-07310	2	Flange Lock Nut M8
15	STK-A-67400	0	Buss Bar Insulator Kit
10	STK-Q-03210	0	Thread Cutting Screw 1/4-20 x 5/16"
16	STK-Q-05020	5	M5 x 8mm Thread Rolling Screw
1	1100BTCU07605C	0	1100BTCU 36" x 84" Cover
1	1100BTCU07605B	0	1100BTCU 36" x 84" x 8" Body
3	885 BTMF	0	885 BTMF Mounting Feet Kit

Tél: (450) 979-4373
Fax: (450) 979-4626
www.exmweb.com

Flatness / Aplatissement: Max 3.0mm

Projection

Customer / Client		Date	
Drawn By / Dessiné Par	BoxCad: BoxCad	Date	02-Aug-22
Material / Matière	14 Ga Cold Rolled A1008 CS Type B (1.7mm)		
Color / Couleur	Asa-61 Grey	Finish / Fini	Smooth
Description	1100BTCU 600A - 5Wires x 84" Assembly	Detail Rev.	
Part Number / Numéro Pièce	**1100BTCU07605**	Rev.	**0**

This drawing is confidential and must not be reproduced or used without the consent of EXM

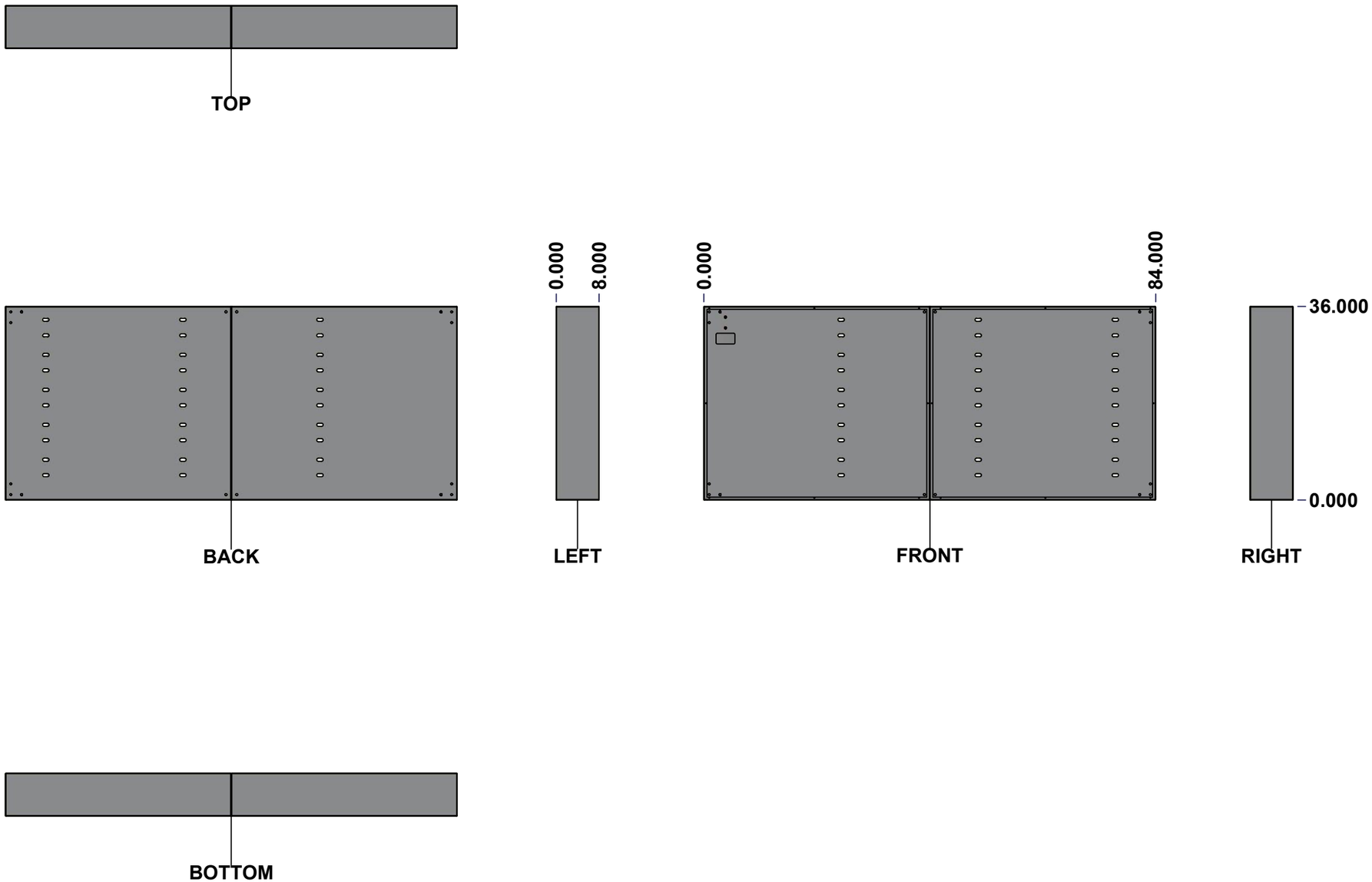

No.	Revisions	Date	By/Par

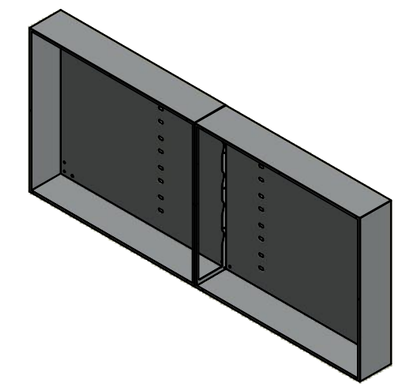

Isometric View

Ce dessin est confidentiel et ne doit pas être reproduit ou utilisé sans le consentement de EXM

Tél: (450) 979-4373
Fax: (450) 979-4626
www.exmweb.com

Flatness / Aplatissement: Max 3.0mm

Projection

Customer / Client		Date	
Drawn By / Dessiné Par	BoxCad: BoxCad	Date	02-Aug-22
Material / Matière	14 Ga Cold Rolled A1008 CS Type B (1.7mm)		
Color / Couleur	Asa-61 Grey	Finish / Fini	Smooth
Description	1100BTCU 36" x 84" x 8" Body	Detail Rev.	
Part Number / Numéro Pièce	**1100BTCU07605B**	Rev.	**0**

4 / 8

SEE BILL OF MATERIAL ON LAST PAGE

This drawing is confidential and must not be reproduced or used without the consent of Eurobex

Ce dessin est confidentiel et ne doit pas être reproduit ou utilisé sans le consentement de Eurobex

STANDARD FEATURES ARE NOT LISTED IN THIS HOLE TABLE

HOLE TABLE - BACK VIEW (CUSTOM FEATURE ONLY)

CUT-OUT	XDIM	YDIM	DESCRIPTION
1	80.000	34.000	GND STUD M8 x 35mm (Inside)
2	80.000	32.000	GND STUD M8 x 35mm (Inside)

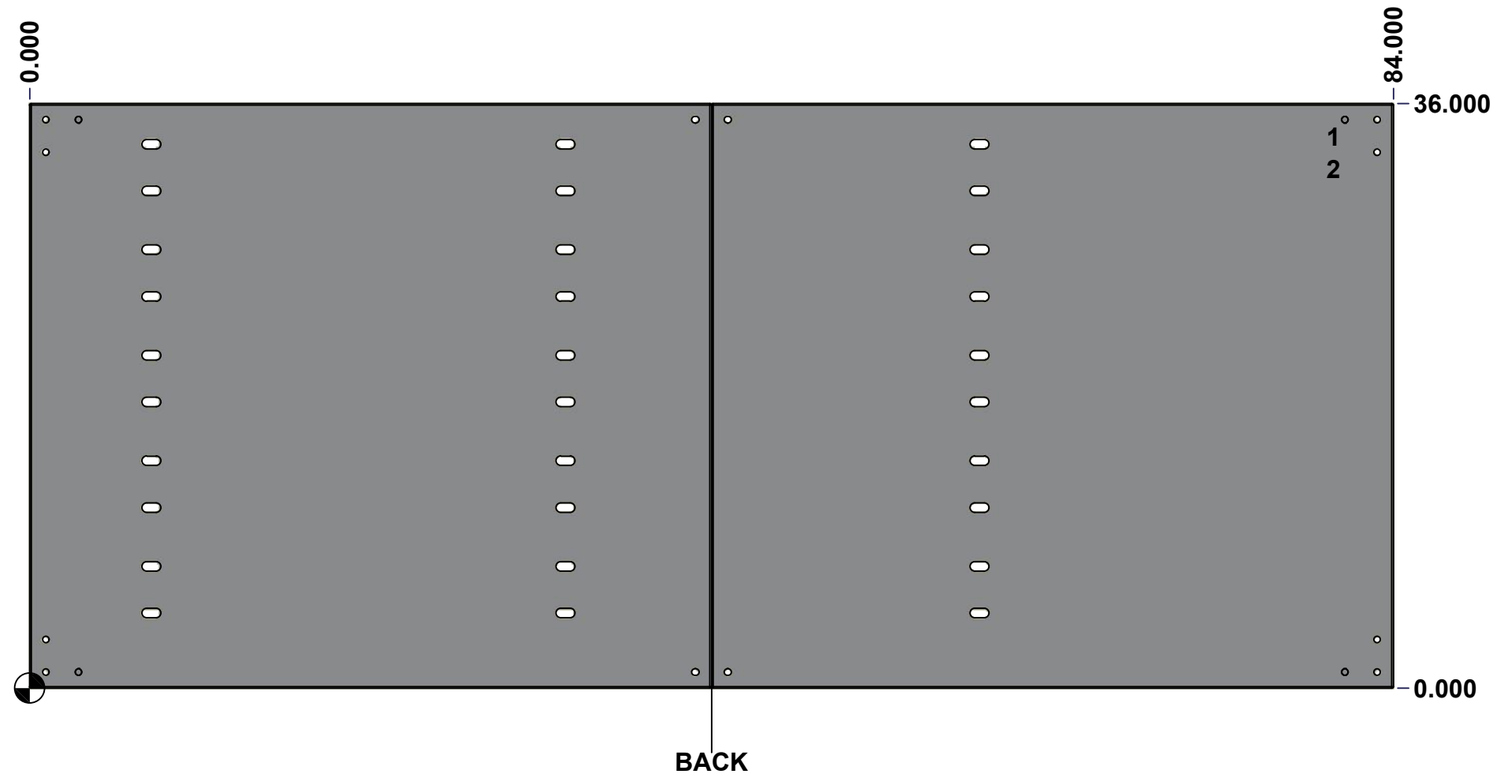

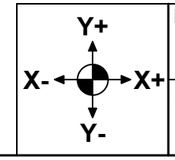

Description	Status
1100BTCU 36" x 84" x 8" Body	(NULL)
Part Number / Numéro Pièce: **1100BTCU07605B**	Rev. **0**

5 / 8

This drawing is confidential and must not be reproduced or used without the consent of EXM
Ce dessin est confidentiel et ne doit pas être reproduit ou utilisé sans le consentement de EXM

No.	Revisions	Date	By/Par

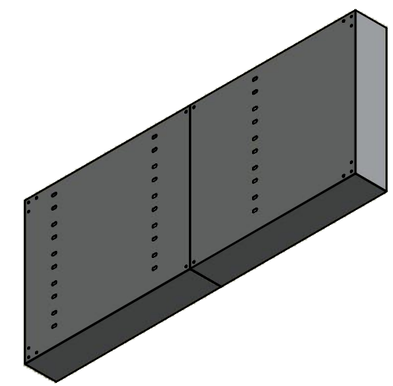

Isometric View

Tél: (450) 979-4373
Fax: (450) 979-4626
www.exmweb.com

Flatness
Aplatissement
Max 3.0mm

Projection

Customer Client		Date	
Drawn By Dessiné Par	BoxCad: BoxCad	Date	02-Aug-22
Material Matière	14 Ga Cold Rolled A1008 CS Type B (1.7mm)		
Color Couleur	Asa-61 Grey	Finish Fini	Smooth
Description	1100BTCU 36" x 84" x 8" Body	Detail Rev.	
Part Number Numéro Pièce	**1100BTCU07605B**	Rev. **0**	6 / 8

Parts List

Qty	Part Number	Rev	Description
1	STK-P-02400S	0	Powder Paint (Asa-61 Grey / Smooth)
1	1100BTCU07605B-P	0	1100BTCU 36" x 84" x 8" Body Part
1	STK-S-00100	0	3.5" x 2" Silver Milar Flexcon Sticker
2	STK-Q-16005	1	Stud M8 x 35 (No Paint Cap Required)
1	1100BTCU07605E-P	0	1100BTCU 36" x 84" x 8" Body Part

This drawing is confidential and must not be reproduced or used without the consent of EXM

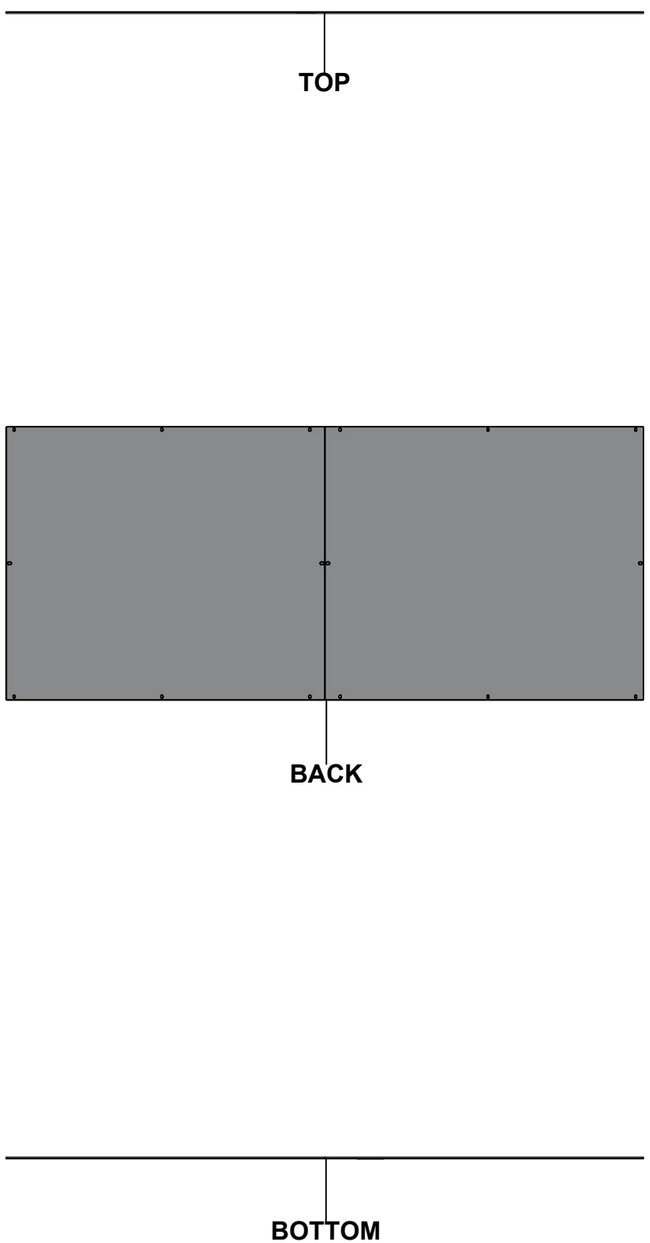

SEE BILL OF MATERIAL ON LAST PAGE

No.	Revisions	Date	By/Par

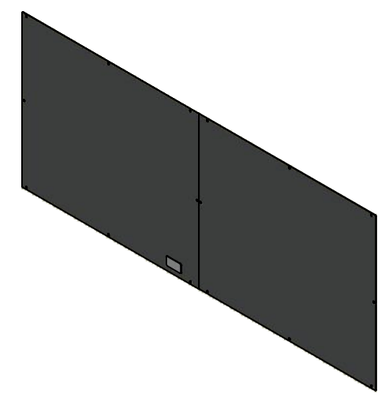

Isometric View

Tél: (450) 979-4373
Fax: (450) 979-4626
www.exmweb.com

Flatness / Aplatissement: Max 3.0mm

Projection

Customer / Client		Date	
Drawn By / Dessiné Par	BoxCad: BoxCad	Date	02-Aug-22
Material / Matière	14 Ga Cold Rolled A1008 CS Type B (1.7mm)		
Color / Couleur	Asa-61 Grey	Finish / Fini	Smooth
Description	1100BTCU 36" x 84" Cover	Detail Rev.	
Part Number / Numéro Pièce	**1100BTCU07605C**	Rev.	**0**

7 / 8

Ce dessin est confidentiel et ne doit pas être reproduit ou utilisé sans le consentement de EXM

Tolerance ±1/32" unless otherwise specified

C:\Vault_Workspace\Inventor_Dwg\BoxCad\Result\1100BTCU07605\1100BTCU07605.idw

Tolérance ±1/32" sauf spécification contraire

This drawing is confidential and must not be reproduced or used without the consent of EXM

Ce dessin est confidentiel et ne doit pas être reproduit ou utilisé sans le consentement de EXM

No.	Revisions	Date	By/Par

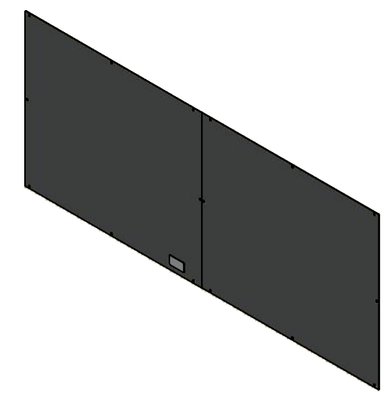

Isometric View

Tél: (450) 979-4373
Fax: (450) 979-4626
www.exmweb.com

Flatness
Aplatissement
Max 3.0mm

Projection

Customer Client		Date	
Drawn By Dessiné Par	BoxCad: BoxCad	Date	02-Aug-22
Material Matière	14 Ga Cold Rolled A1008 CS Type B (1.7mm)		
Color Couleur	Asa-61 Grey	Finish Fini	Smooth
Description 1100BTCU 36" x 84" Cover		Detail Rev.	
Part Number Numéro Pièce **1100BTCU07605C**		Rev. **0**	8 / 8

Parts List

Qty	Part Name	Rev	Description
1	STK-P-02400S	0	Powder Paint (Asa-61 Grey / Smooth)
1	1100BTCU07605F-P	0	1100BTCU 36" x 84" Flanged Cover Part
1	1100BTCU07605C-P	0	1100BTCU 36" x 84" Flat Cover Part
1	STK-S-00100	0	3.5" x 2" Silver Milar Flexcon Sticker