This drawing is confidential and must not be reproduced or used without the consent of EXM

Ce dessin est confidentiel et ne doit pas être reproduit ou utilisé sans le consentement de EXM

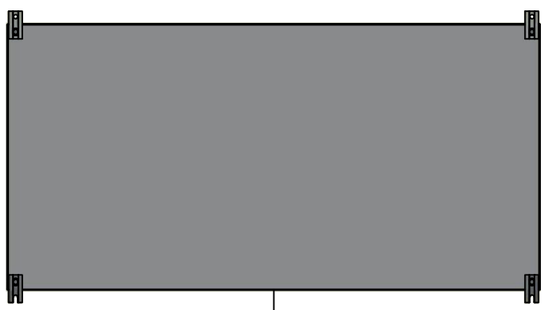

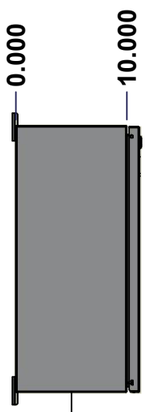

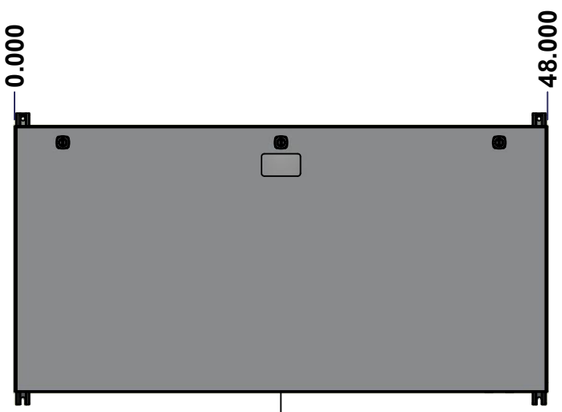

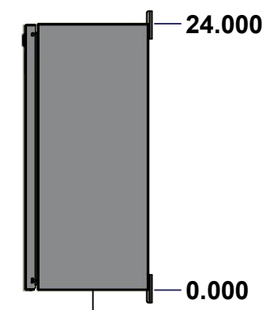

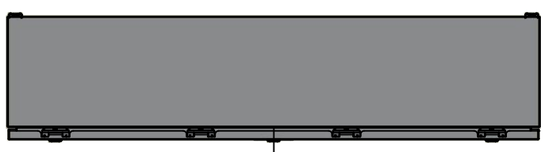

SEE BILL OF MATERIAL ON LAST PAGE

No.	Revisions	Date	By/Par

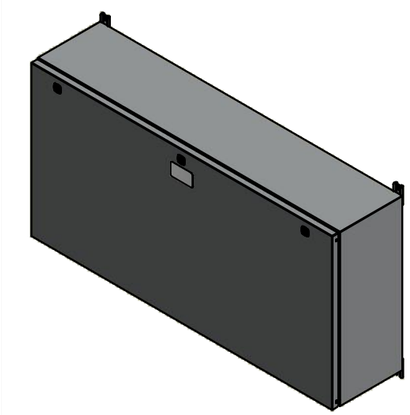

Isometric View

Tél: (450) 979-4373
Fax: (450) 979-4626
www.exmweb.com

Flatness / Aplatissement: Max 3.0mm

Projection

Customer / Client		Date	
Drawn By / Dessiné Par	BoxCad: BoxCad	Date	07-Sep-22
Material / Matière	14 Ga Cold Rolled A1008 CS Type B (1.7mm)		
Color / Couleur	Asa-61 Grey	Finish / Fini	Smooth
Description	1412BT 600A - 3Wires x 48" Assembly	Detail Rev.	
Part Number / Numéro Pièce	**1412BT04603**	Rev.	**0**

This drawing is confidential and must not be reproduced or used without the consent of Eurobex

Ce dessin est confidentiel et ne doit pas être reproduit ou utilisé sans le consentement de Eurobex

STANDARD FEATURES ARE NOT LISTED IN THIS HOLE TABLE

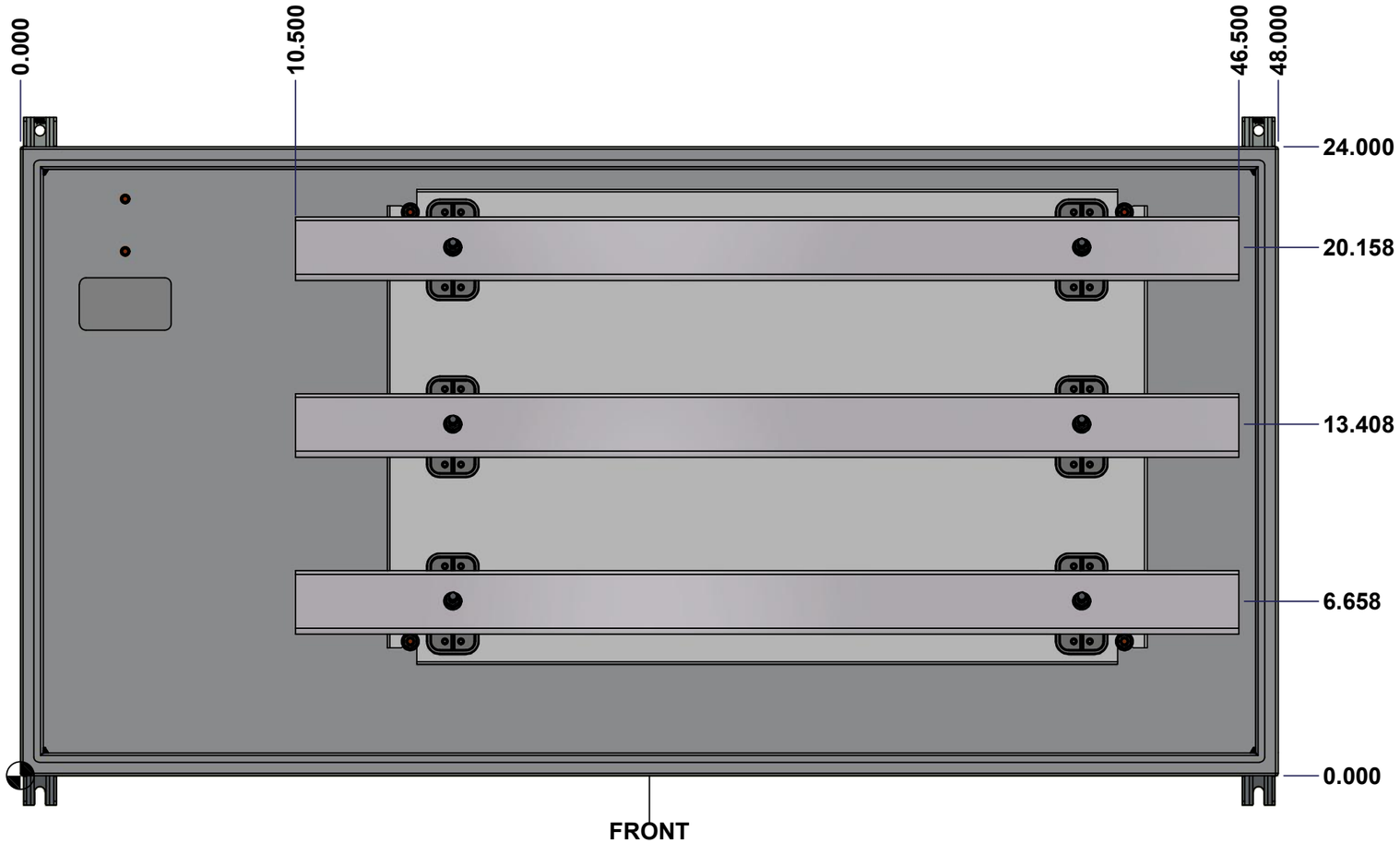

Y+ / X- X+ / Y-	Description 1412BT 600A - 3Wires x 48" Assembly	Status (NULL)
	Part Number Numéro Pièce **1412BT04603**	Rev. **0**

This drawing is confidential and must not be reproduced or used without the consent of EXM

Ce dessin est confidentiel et ne doit pas être reproduit ou utilisé sans le consentement de EXM

NOTE

ITEM	DESCRIPTION
1	NEMA 4/12 Enclosure
2	C/W Standard ground studs on box and cover
3	W/O Standard door stiffener
4	C/W Special inner panel (Sold separately)
5	C/W Standard inner panel mounting studs

No.	Revisions	Date	By/Par

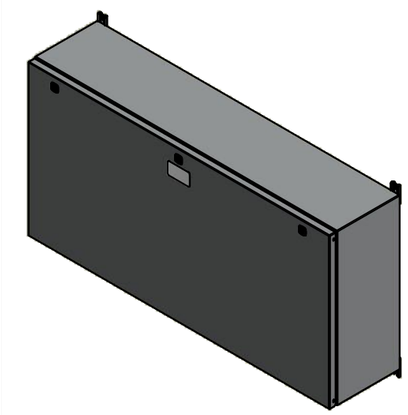

Isometric View

PACKING

ITEM	QTY	DESCRIPTION
Cardboard sleeve	2	Top and Bottom
Cardboard strip	2	Between back of enclosure and inner panel
Plastic bag	1	To protect cover surface and inside gasket
Cardboard corner	4	To reinforced for the plastic strap tightening
Plastic strap - Black	2	To Squeeze 2 cardboard sleeve together
Packaging label	3	White label with PN
Plastic strap- Green	2	To secure the enclosure to the wood pallet
Wood Pallet	1	2" deeper and 3" larger than enclosure size

Qty	Part Number	Rev	Description
1	885 ESMF1	0	885 ESMF1 Mounting Feet Kit
1	1412BT04603BAR1-P	0	Rounded Edge Aluminum Bar 3/8" x 2 1/2"
1	1412BT04603BAR2-P	0	Rounded Edge Aluminum Bar 3/8" x 2 1/2"
1	1412BT04603BAR3-P	0	Rounded Edge Aluminum Bar 3/8" x 2 1/2"
1	1412BT04603IP1	0	1412BT 18.125" x 29" Inner Panel
6	STK-A-67400	0	Buss Bar Insulator Kit
1	STK-K-01800	5	5412 ES Accessory Kit
4	STK-Q-04050-07	7	M6 x 7mm Hexagon Socket Head Machine Screw with Nyseal
10	STK-Q-07310	2	Flange Lock Nut M8
4	STK-Q-07610	8	M8 Plastic Spacer 22.2mm
1	1412BT04603B	0	1412BT 24" x 48" x 10" Body
1	1412BT04603C	0	1412BT 24" x 48" Cover

Parts List

Tél: (450) 979-4373
Fax: (450) 979-4626
www.exmweb.com

Flatness / Aplatissement: Max 3.0mm

Projection

Customer / Client		Date	
Drawn By / Dessiné Par	BoxCad: BoxCad	Date	07-Sep-22
Material / Matière	14 Ga Cold Rolled A1008 CS Type B (1.7mm)		
Color / Couleur	Asa-61 Grey	Finish / Fini	Smooth
Description	1412BT 600A - 3Wires x 48" Assembly	Detail Rev.	
Part Number / Numéro Pièce	**1412BT04603**	Rev.	**0**

This drawing is confidential and must not be reproduced or used without the consent of EXM

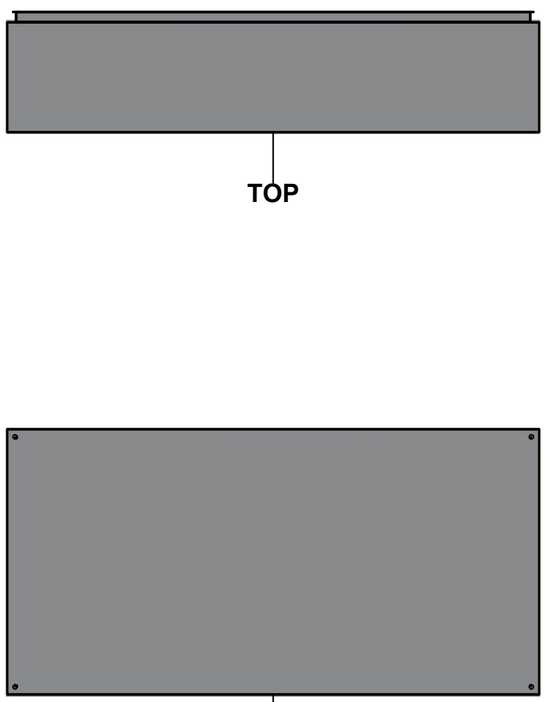

SEE BILL OF MATERIAL ON LAST PAGE

No.	Revisions	Date	By/Par

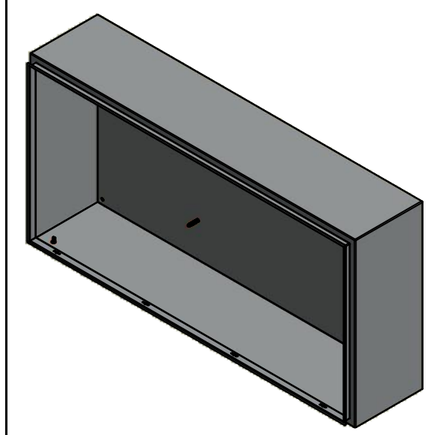

Isometric View

Ce dessin est confidentiel et ne doit pas être reproduit ou utilisé sans le consentement de EXM

Tél: (450) 979-4373
Fax: (450) 979-4626
www.exmweb.com

Flatness / Aplatissement: Max 3.0mm

Projection

Customer / Client		Date	
Drawn By / Dessiné Par	BoxCad: BoxCad	Date	07-Sep-22
Material / Matière	14 Ga Cold Rolled A1008 CS Type B (1.7mm)		
Color / Couleur	Asa-61 Grey	Finish / Fini	Smooth
Description	1412BT 24" x 48" x 10" Body	Detail Rev.	
Part Number / Numéro Pièce	**1412BT04603B**	Rev.	**0**

This drawing is confidential and must not be reproduced or used without the consent of Eurobex

Ce dessin est confidentiel et ne doit pas être reproduit ou utilisé sans le consentement de Eurobex

STANDARD FEATURES ARE NOT LISTED IN THIS HOLE TABLE

HOLE TABLE - BACK VIEW (CUSTOM FEATURE ONLY)

CUT-OUT	XDIM	YDIM	DESCRIPTION
1	44.000	22.000	GND STUD M8 x 35mm (Inside)
2	44.000	20.000	GND STUD M8 x 35mm (Inside)
3	5.875	21.500	IP STUD M8 x 35mm (Inside)
4	33.125	21.500	IP STUD M8 x 35mm (Inside)
5	5.875	5.125	IP STUD M8 x 35mm (Inside)
6	33.125	5.125	IP STUD M8 x 35mm (Inside)

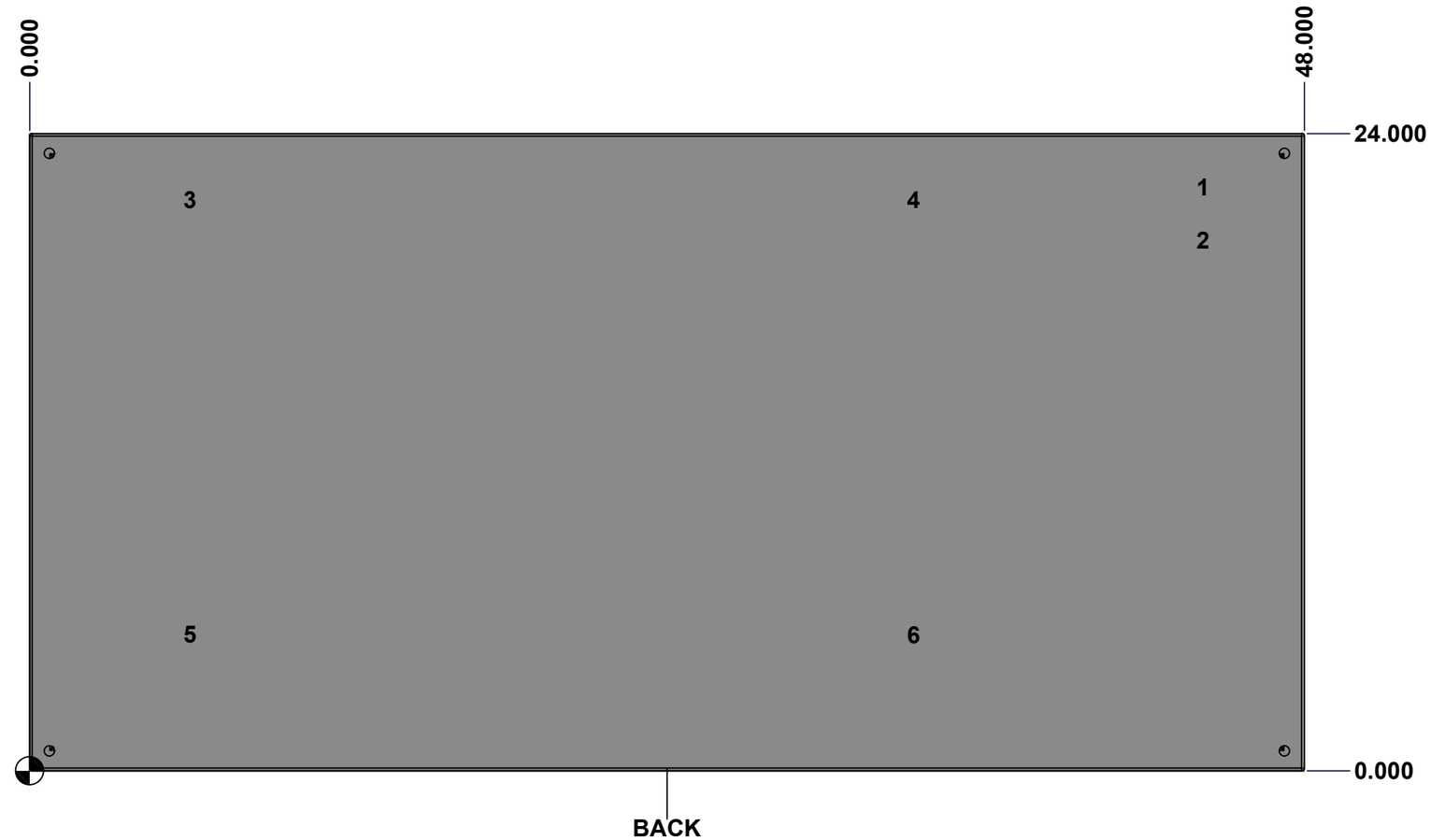

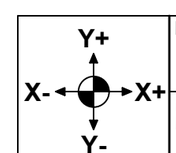

Description	Status
1412BT 24" x 48" x 10" Body	(NULL)
Part Number / Numéro Pièce: **1412BT04603B**	Rev. **0**

5 / 11

This drawing is confidential and must not be reproduced or used without the consent of EXM
Ce dessin est confidentiel et ne doit pas être reproduit ou utilisé sans le consentement de EXM

No.	Revisions	Date	By/Par

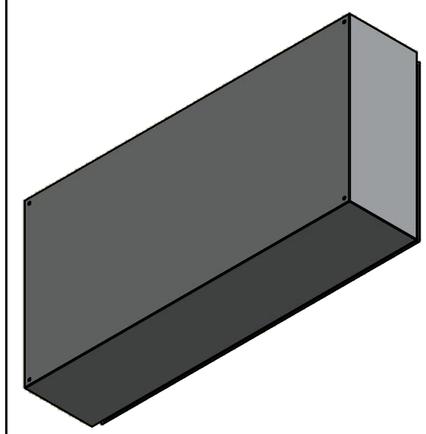

Isometric View

Tél: (450) 979-4373
Fax: (450) 979-4626
www.exmweb.com

Flatness
Aplatissement
Max 3.0mm

Projection

Customer Client		Date	
Drawn By Dessiné Par	BoxCad: BoxCad	Date	07-Sep-22
Material Matière	14 Ga Cold Rolled A1008 CS Type B (1.7mm)		
Color Couleur	Asa-61 Grey	Finish Fini	Smooth
Description	1412BT 24" x 48" x 10" Body	Detail Rev.	
Part Number Numéro Pièce	**1412BT04603B**	Rev. **0**	6 / 11

Parts List

Qty	Part Number	Rev	Description
1	STK-P-02400S	0	Powder Paint (Asa-61 Grey / Smooth)
6	STK-Q-16005	1	Stud M8 x 35 (No Paint Cap Required)
1	STK-Q-16080	0	Ground Stud M6 x 16mm
1	STK-S-00100	0	3.5" x 2" Silver Milar Flexcon Sticker
1	1412BT04603B-P	0	1412BT 24" x 48" x 10" Body Part

This drawing is confidential and must not be reproduced or used without the consent of EXM

Ce dessin est confidentiel et ne doit pas être reproduit ou utilisé sans le consentement de EXM

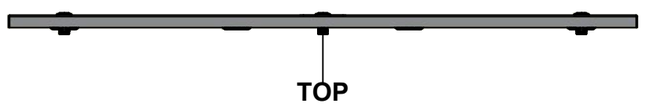

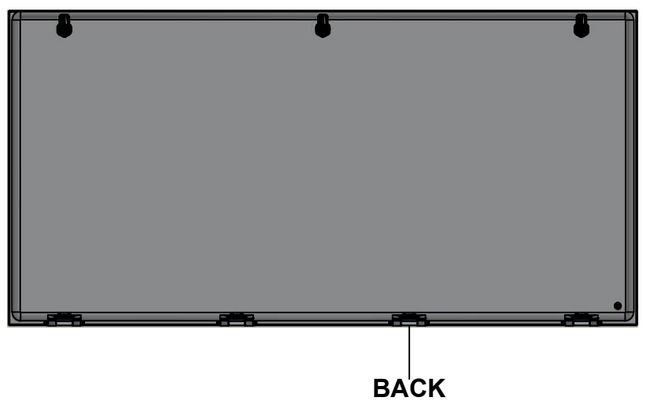

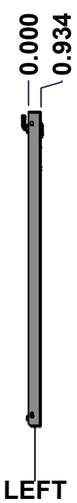

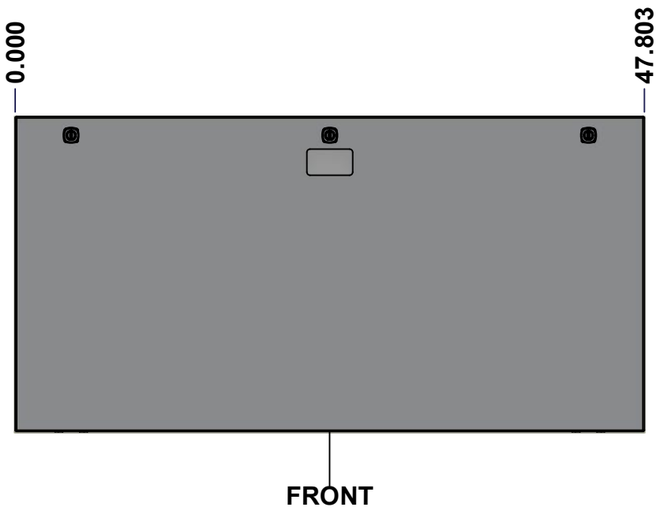

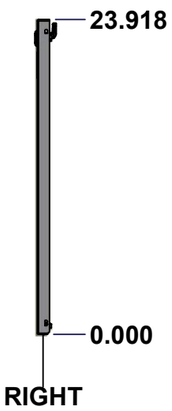

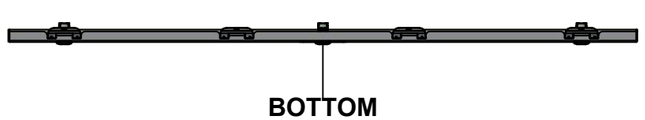

SEE BILL OF MATERIAL ON LAST PAGE

No.	Revisions	Date	By/Par

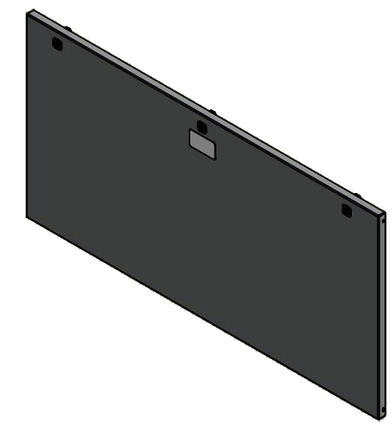

Isometric View

Tél: (450) 979-4373
Fax: (450) 979-4626
www.exmweb.com

Flatness / Aplatissement: Max 3.0mm

Projection

Customer / Client		Date	
Drawn By / Dessiné Par	BoxCad: BoxCad	Date	07-Sep-22
Material / Matière	14 Ga Cold Rolled A1008 CS Type B (1.7mm)		
Color / Couleur	Asa-61 Grey	Finish / Fini	Smooth
Description	1412BT 24" x 48" Cover	Detail Rev.	
Part Number / Numéro Pièce	**1412BT04603C**	Rev.	**0**

7 / 11

This drawing is confidential and must not be reproduced or used without the consent of Eurobex

Ce dessin est confidentiel et ne doit pas être reproduit ou utilisé sans le consentement de Eurobex

STANDARD FEATURES ARE NOT LISTED IN THIS HOLE TABLE

HOLE TABLE - FRONT VIEW (CUSTOM FEATURE ONLY)

CUT-OUT	XDIM	YDIM	DESCRIPTION
1	1.500	1.486	GND STUD M6 x 16mm (Inside)
2	43.553	22.494	LOCK 880 SCQ4-SL @ 90.0°
3	23.902	22.494	LOCK 880 SCQ4-SL @ 90.0°
4	4.250	22.494	LOCK 880 SCQ4-SL @ 90.0°

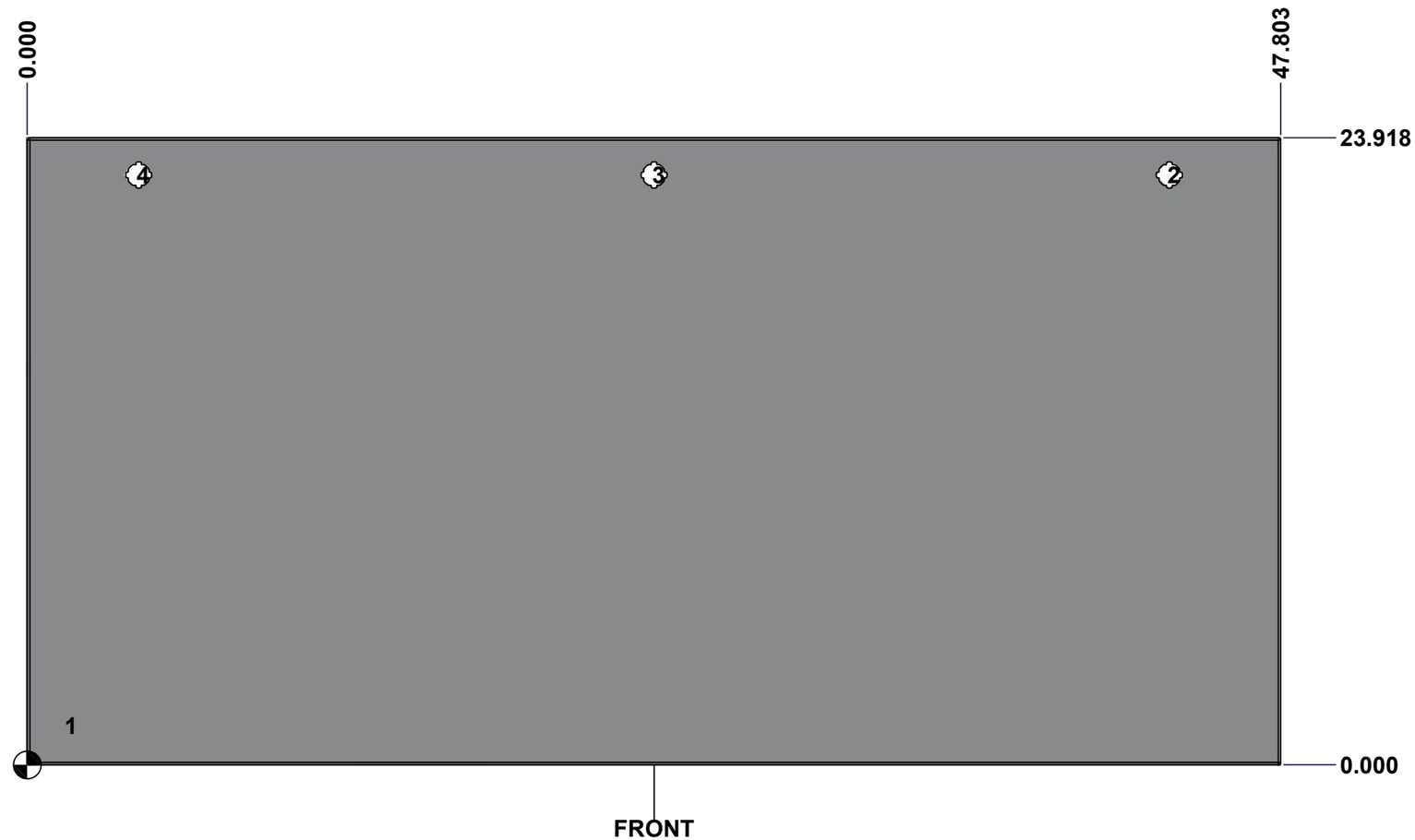

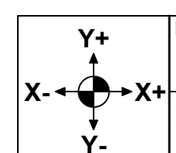

Description	Status
1412BT 24" x 48" Cover	(NULL)
Part Number / Numéro Pièce: **1412BT04603C**	Rev. **0**

Tolerance ±1/32" unless otherwise specified

C:\Vault_Workspace\Inventor_Dwg\BoxCad\Result\1412BT04603\1412BT04603.idw

Tolérance ±1/32" sauf spécification contraire

This drawing is confidential and must not be reproduced or used without the consent of EXM

Ce dessin est confidentiel et ne doit pas être reproduit ou utilisé sans le consentement de EXM

No.	Revisions	Date	By/Par

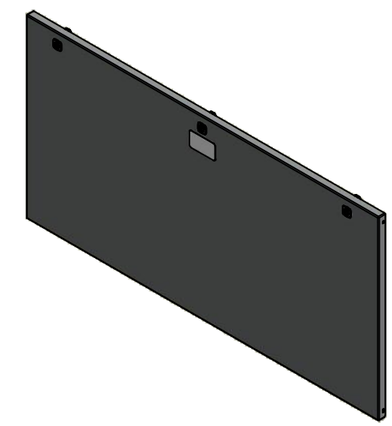

Isometric View

Parts List			
Qty	Part Name	Rev	Description
1	1412BT04603G	0	1412BT 24" x 48" Cover Gasket
1	STK-P-02400S	0	Powder Paint (Asa-61 Grey / Smooth)
4	STK-K-09800	10	5412 ES Hinge with 2 Captive Hinge Pins
1	STK-Q-16080	0	Ground Stud M6 x 16mm
1	STK-S-00100	0	3.5" x 2" Silver Milar Flexcon Sticker
1	1412BT04603C-P	0	1412BT 24" x 48" Cover Part
3	880 SCQ4-SL	6	5412 ES 1/4 Turn Lock

Tél: (450) 979-4373
Fax: (450) 979-4626
www.exmweb.com

Flatness / Aplatissement: Max 3.0mm

Projection

Customer / Client:

Date:

Drawn By / Dessiné Par: BoxCad: BoxCad

Date: 07-Sep-22

Material / Matière: 14 Ga Cold Rolled A1008 CS Type B (1.7mm)

Color / Couleur: Asa-61 Grey

Finish / Fini: Smooth

Description: 1412BT 24" x 48" Cover

Detail Rev.:

Part Number / Numéro Pièce: **1412BT04603C**

Rev.: **0**

9 / 11

This drawing is confidential and must not be reproduced or used without the consent of EXM

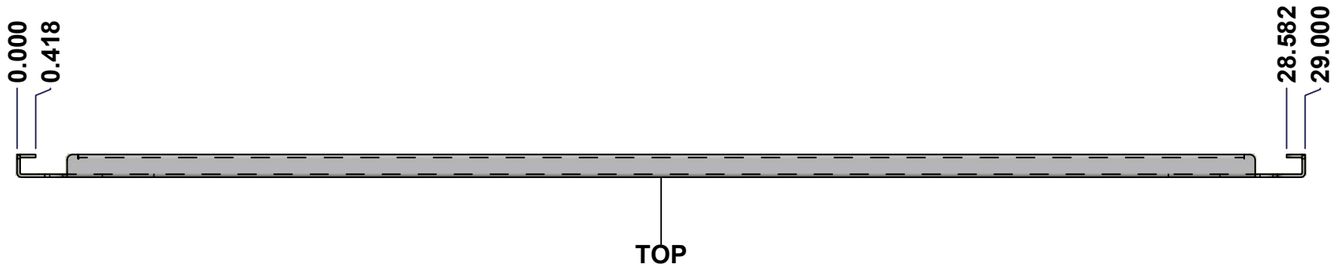

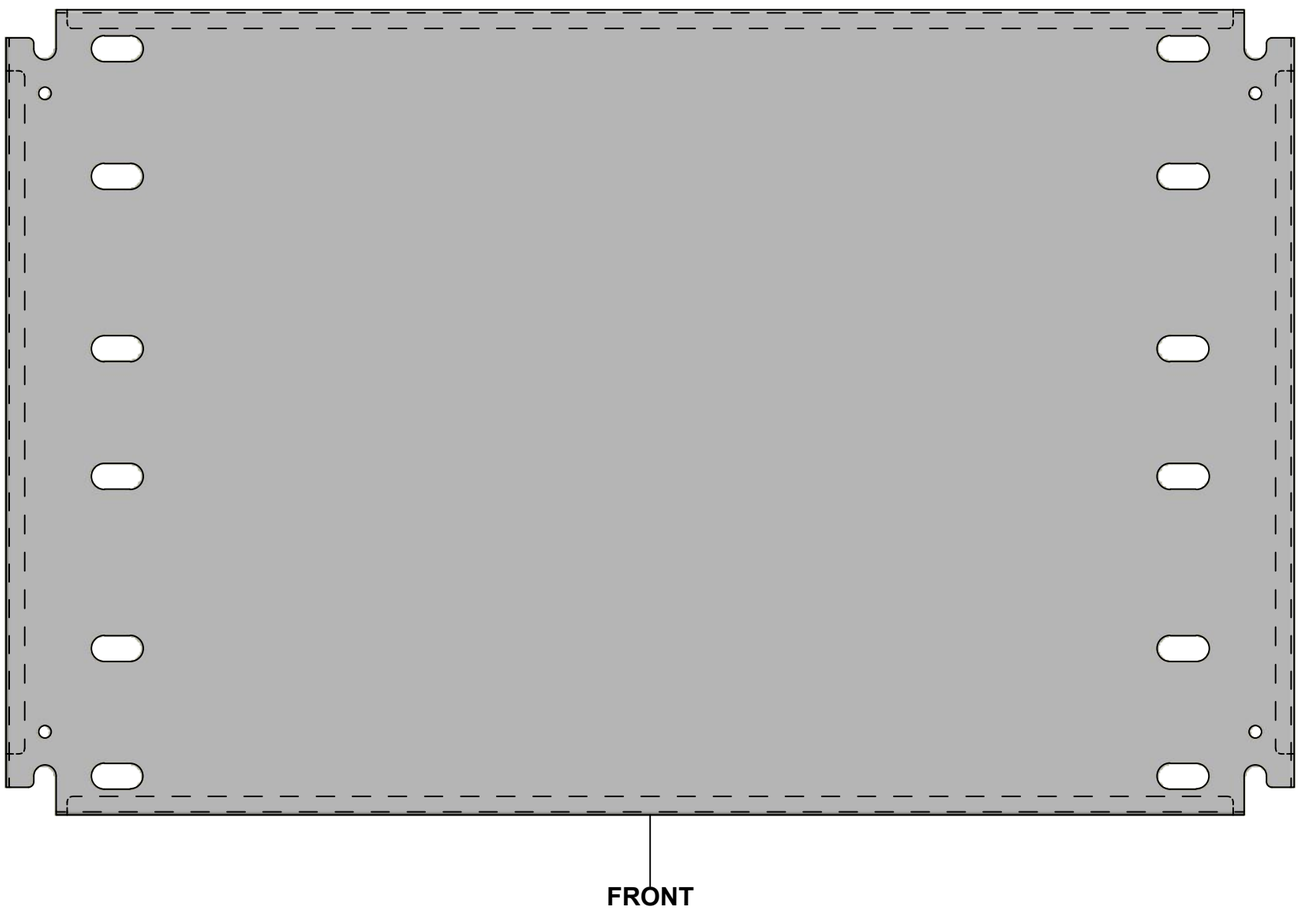

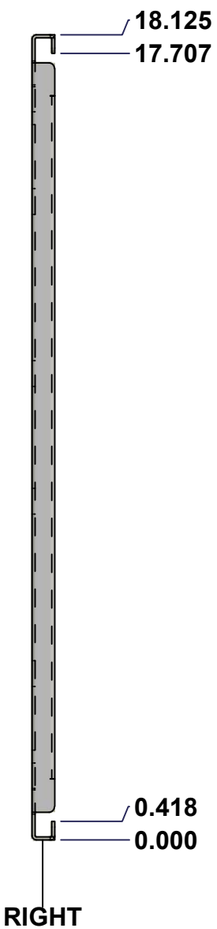

SEE BILL OF MATERIAL ON LAST PAGE

No.	Revisions	Date	By/Par

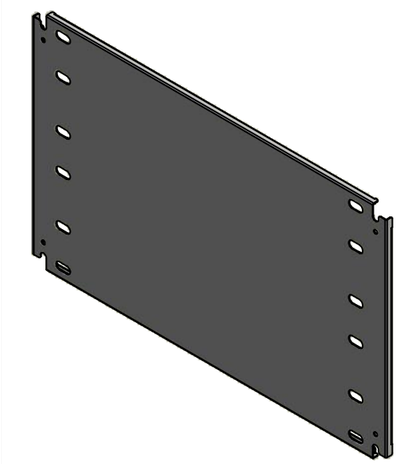

Isometric View

Ce dessin est confidentiel et ne doit pas être reproduit ou utilisé sans le consentement de EXM

Tél: (450) 979-4373
Fax: (450) 979-4626
www.exmweb.com

Flatness / Aplatissement: Max 3.0mm

Projection

Customer / Client		Date	
Drawn By / Dessiné Par	BoxCad: BoxCad	Date	07-Sep-22
Material / Matière	14 Ga Cold Rolled A1008 CS Type B (1.7mm)		
Color / Couleur	White RAL9003	Finish / Fini	Smooth
Description	1412BT 18.125" x 29" Inner Panel	Detail Rev.	
Part Number / Numéro Pièce	**1412BT04603IP1**	Rev.	**0**

10 / 11

Tolerance ±1/32" unless otherwise specified

C:\Vault_Workspace\Inventor_Dwg\BoxCad\Result\1412BT04603\1412BT04603.idw

Tolérance ±1/32" sauf spécification contraire

This drawing is confidential and must not be reproduced or used without the consent of EXM

Ce dessin est confidentiel et ne doit pas être reproduit ou utilisé sans le consentement de EXM

No.	Revisions	Date	By/Par

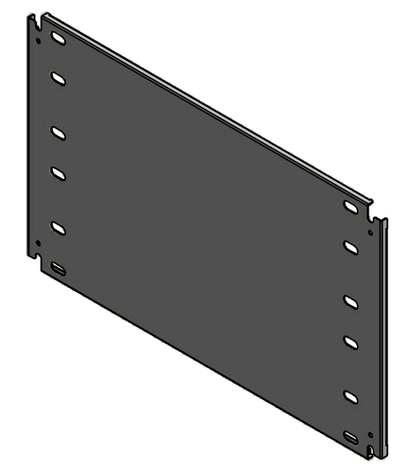

Isometric View

Tél: (450) 979-4373
Fax: (450) 979-4626
www.exmweb.com

Flatness
Aplatissement
Max 3.0mm

Projection

Customer Client		Date	
Drawn By Dessiné Par	BoxCad: BoxCad	Date	07-Sep-22
Material Matière	14 Ga Cold Rolled A1008 CS Type B (1.7mm)		
Color Couleur	White RAL9003	Finish Fini	Smooth
Description	1412BT 18.125" x 29" Inner Panel	Detail Rev.	
Part Number Numéro Pièce	**1412BT04603IP1**	Rev. **0**	11 / 11

Parts List

Qty	Part Number	Rev	Description
1	STK-P-02401S	0	Powder Paint (White / Smooth)
1	1412BT04603IP1-P	0	1412BT 18.125" x 48" Inner Panel Part