This drawing is confidential and must not be reproduced or used without the consent of EXM

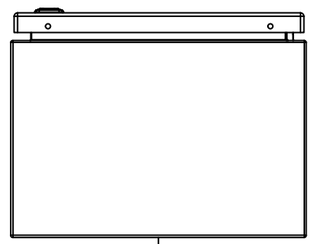

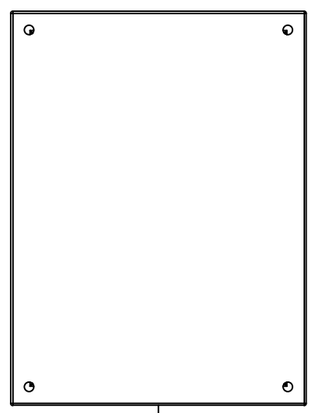

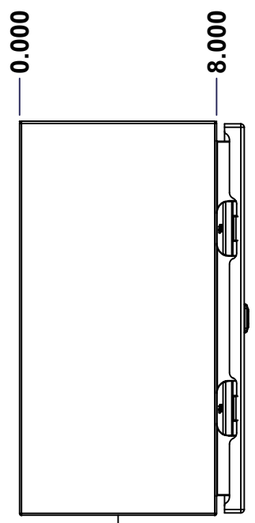

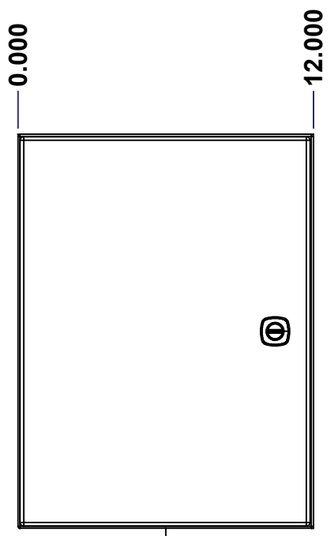

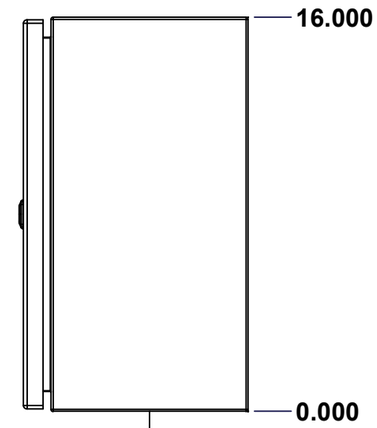

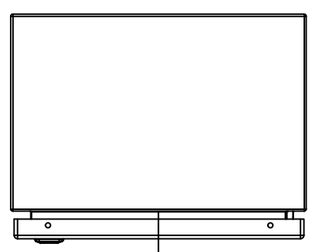

SEE BILL OF MATERIAL ON LAST PAGE

No.	Revisions	Date	By/Par

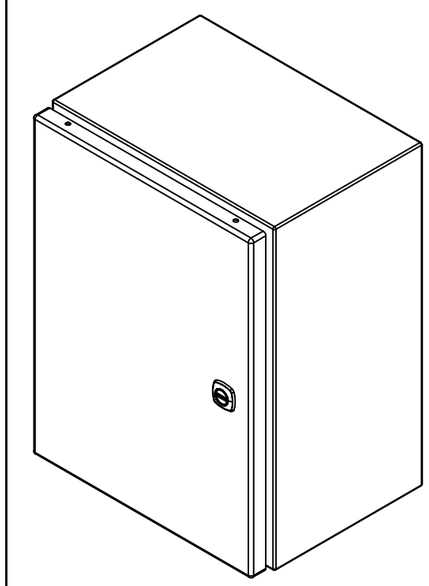

Isometric View

Ce dessin est confidentiel et ne doit pas être reproduit ou utilisé sans le consentement de EXM

Tél: (450) 979-4373
Fax: (450) 979-4626
www.exmweb.com

Flatness / Aplatissement: Max 3.0mm

Projection

Customer / Client		Date	
Drawn By / Dessiné Par	BoxCad: BoxCad	Date	04-Apr-23
Material / Matière	16 Ga Cold Rolled A1008 CS Type B (1.4mm)		
Color / Couleur	Asa-61 Grey	Finish / Fini	Smooth
Description	5412ESBU 16" x 12" x 8" Assembly	Detail Rev.	
Part Number / Numéro Pièce	**5412ESBU161208NOIP**	Rev.	**0**

This drawing is confidential and must not be reproduced or used without the consent of EXM

Ce dessin est confidentiel et ne doit pas être reproduit ou utilisé sans le consentement de EXM

NOTE

ITEM	DESCRIPTION
1	NEMA 4/12 Enclosure
2	C/W Standard ground studs on box and cover
3	C/W Standard door stiffener
4	W/O Inner panel
5	C/W Standard inner panel mounting studs

No.	Revisions	Date	By/Par

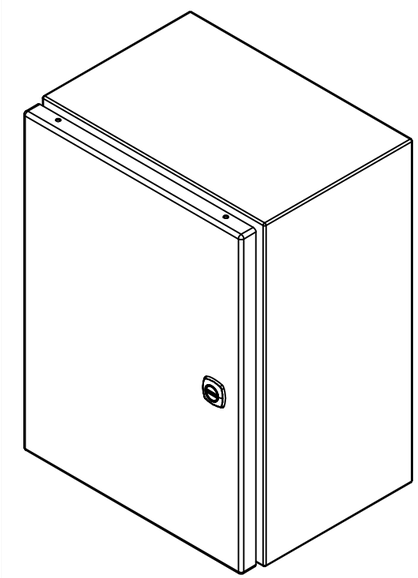

Isometric View

PACKING

ITEM	QTY	DESCRIPTION
Cardboard sleeve	2	Top and Bottom
Cardboard strip	2	Between back of enclosure and inner panel
Plastic bag	1	To protect cover surface and inside gasket
Plastic strap - Black	2	To Squeeze the 2 cardboard sleeve together
Packaging label	1	White label with product number

Parts List

Qty	Part Number	Rev	Description
1	STK-K-01800	5	5412 ES Accessory Kit
1	5412ESBU161208NOIPC	0	5412ESBU 16" x 12" Cover
1	5412ESBU161208NOIPB	0	5412ESBU 16" x 12" x 8" Body
4	STK-Q-04050-08	0	M6 x 8mm Hexagon Socket Head Machine Screw

Tél: (450) 979-4373
Fax: (450) 979-4626
www.exmweb.com

Flatness / Aplatissement: Max 3.0mm

Projection

Customer / Client		Date	
Drawn By / Dessiné Par	BoxCad: BoxCad	Date	04-Apr-23
Material / Matière	16 Ga Cold Rolled A1008 CS Type B (1.4mm)		
Color / Couleur	Asa-61 Grey	Finish / Fini	Smooth
Description	5412ESBU 16" x 12" x 8" Assembly	Detail Rev.	
Part Number / Numéro Pièce	**5412ESBU161208NOIP**	Rev.	**0**

This drawing is confidential and must not be reproduced or used without the consent of EXM
Ce dessin est confidentiel et ne doit pas être reproduit ou utilisé sans le consentement de EXM

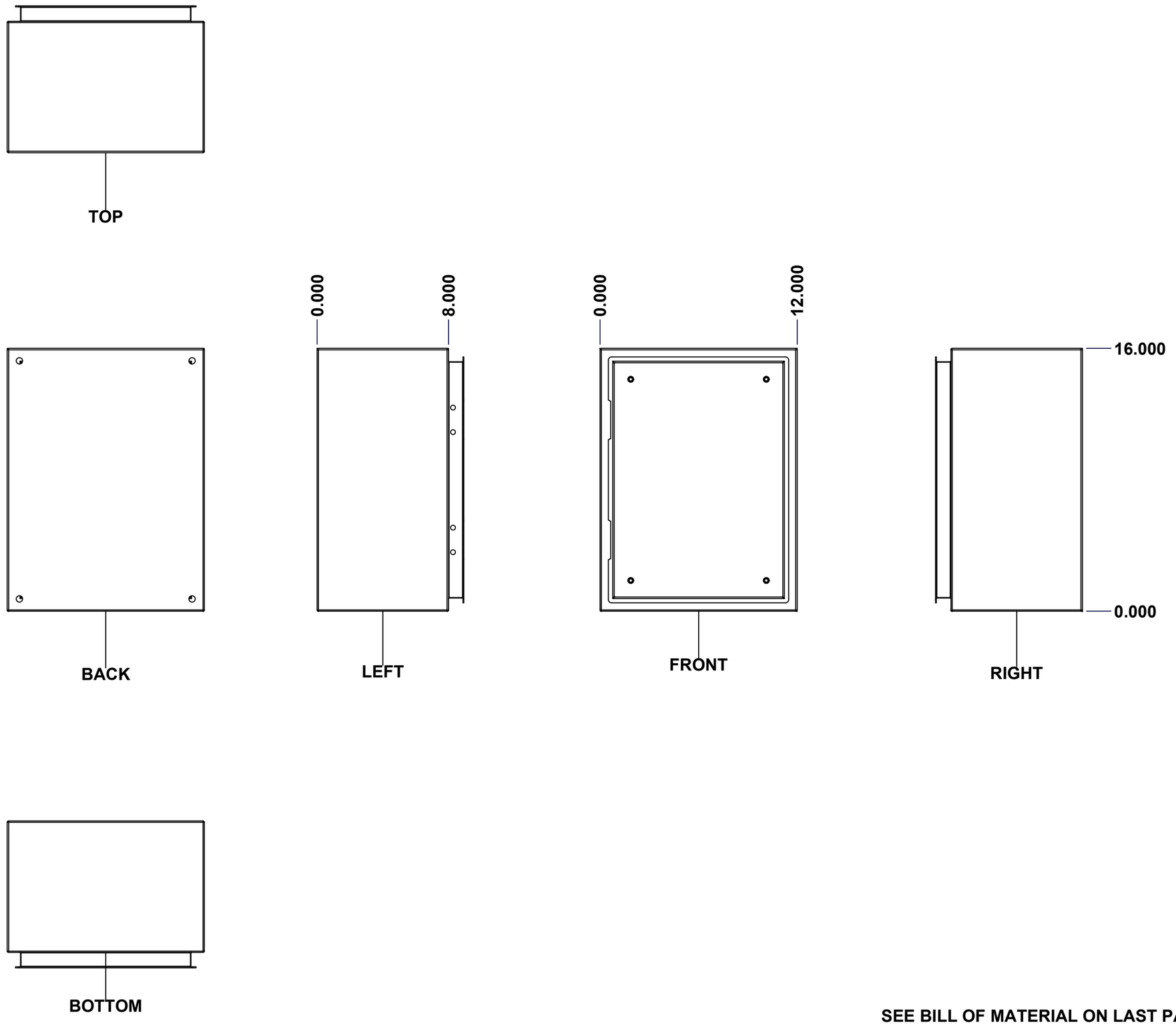

No.	Revisions	Date	By/Par

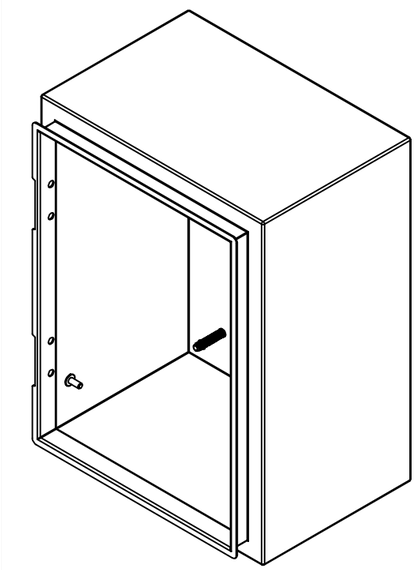

Isometric View

Tél: (450) 979-4373
Fax: (450) 979-4626
www.exmweb.com

Flatness / Aplatissement: Max 3.0mm

Projection

Customer / Client		Date	
Drawn By / Dessiné Par	BoxCad: BoxCad	Date	04-Apr-23
Material / Matière	16 Ga Cold Rolled A1008 CS Type B (1.4mm)		
Color / Couleur	Asa-61 Grey	Finish / Fini	Smooth
Description	5412ESBU 16" x 12" x 8" Body	Detail Rev.	
Part Number / Numéro Pièce	5412ESBU161208NOIPB	Rev.	0

SEE BILL OF MATERIAL ON LAST PAGE

This drawing is confidential and must not be reproduced or used without the consent of EXM

Ce dessin est confidentiel et ne doit pas être reproduit ou utilisé sans le consentement de EXM

STANDARD FEATURES ARE NOT LISTED IN THIS HOLE TABLE

HOLE TABLE - LEFT VIEW (CUSTOM FEATURE ONLY)

CUT-OUT	XDIM	YDIM	DESCRIPTION
1	6.500	2.000	GND STUD M6 x 16mm (Inside)

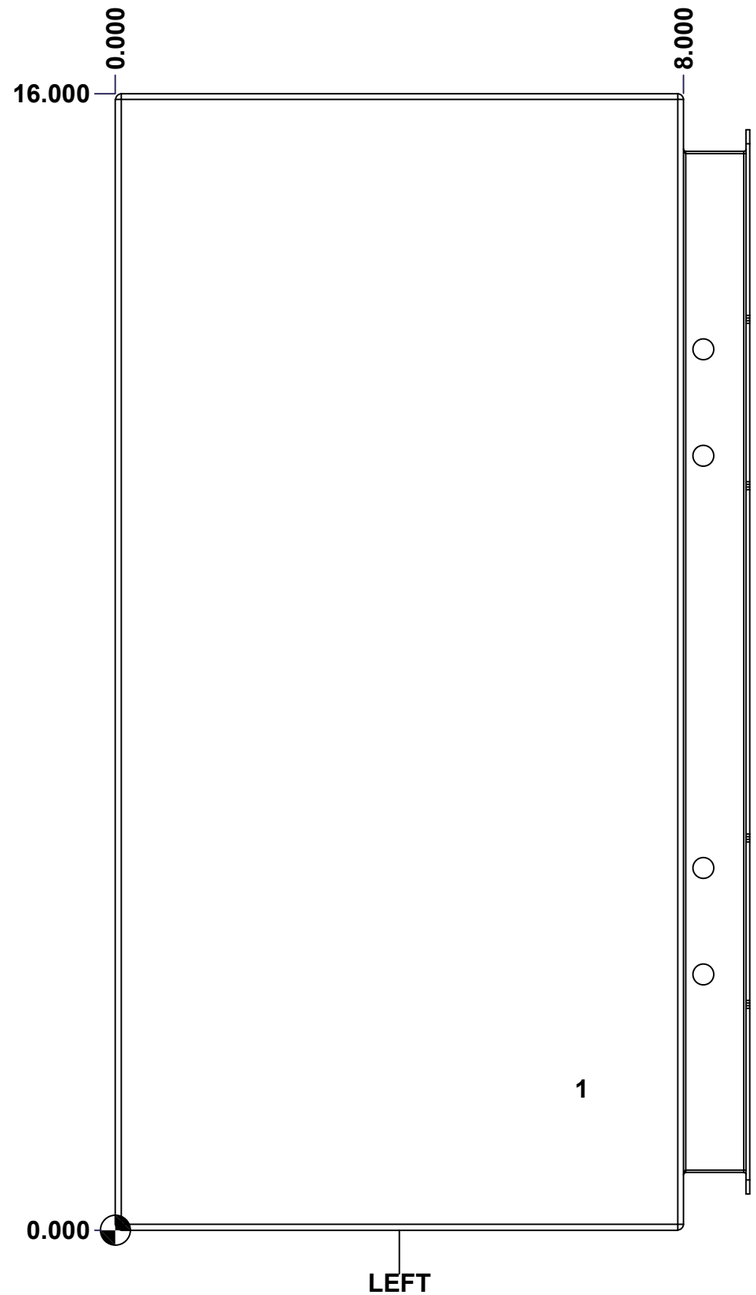

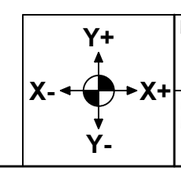

Description	Status
5412ESBU 16" x 12" x 8" Body	(NULL)

Part Number / Numéro Pièce	Rev.	
5412ESBU161208NOIPB	**0**	4 / 9

This drawing is confidential and must not be reproduced or used without the consent of EXM

Ce dessin est confidentiel et ne doit pas être reproduit ou utilisé sans le consentement de EXM

STANDARD FEATURES ARE NOT LISTED IN THIS HOLE TABLE

HOLE TABLE - BACK VIEW (CUSTOM FEATURE ONLY)

CUT-OUT	XDIM	YDIM	DESCRIPTION
1	1.875	1.875	IP STUD M8 x 35mm (Inside)
2	1.875	14.125	IP STUD M8 x 35mm (Inside)
3	10.125	14.125	IP STUD M8 x 35mm (Inside)
4	10.125	1.875	IP STUD M8 x 35mm (Inside)
---	---	---	---
5	11.250	0.750	RND Ø0.390
6	11.250	15.250	RND Ø0.390
7	0.750	15.250	RND Ø0.390
8	0.750	0.750	RND Ø0.390

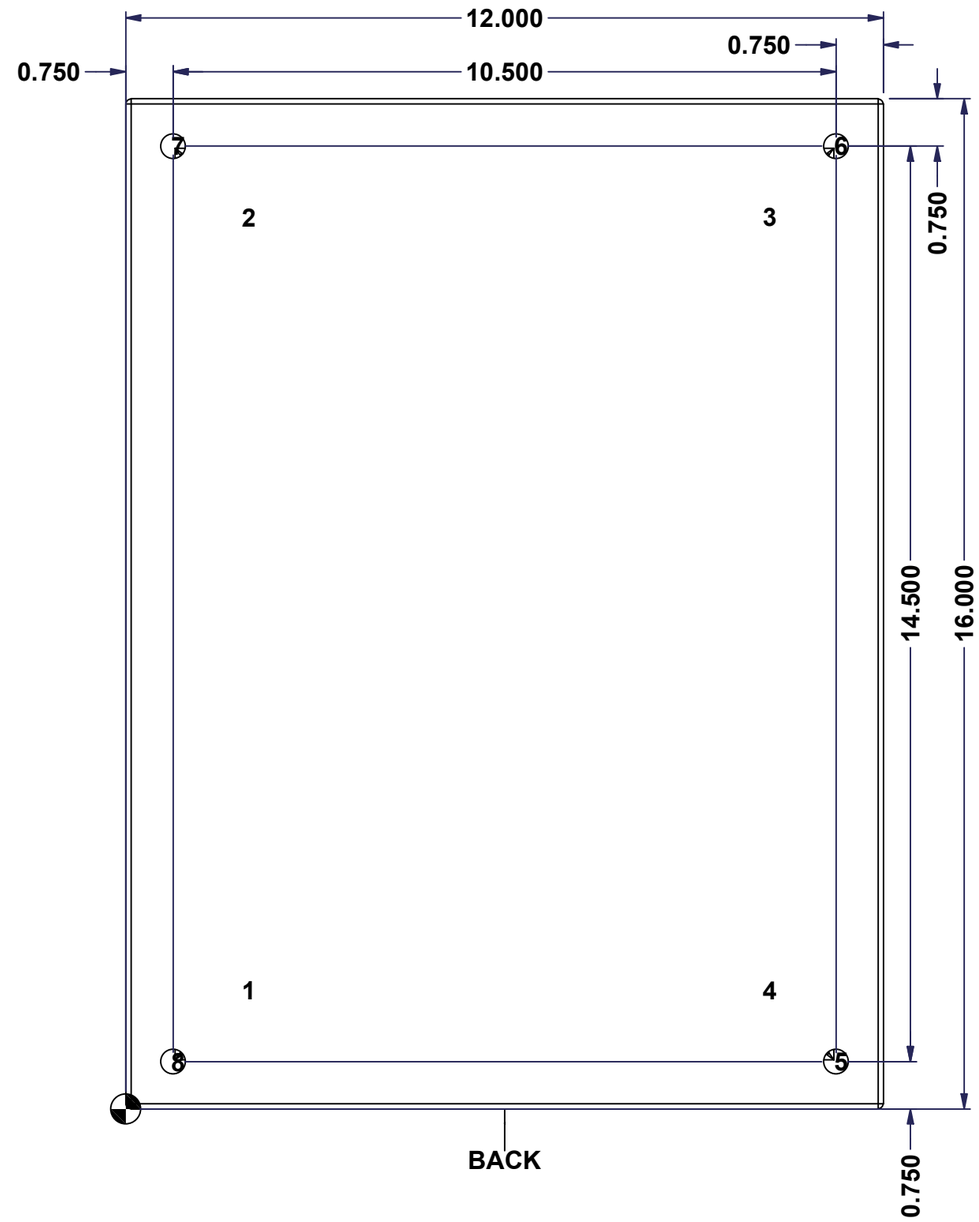

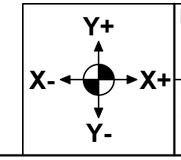

Description	Status
5412ESBU 16" x 12" x 8" Body	(NULL)
Part Number / Numéro Pièce: **5412ESBU161208NOIPB**	Rev. **0**

This drawing is confidential and must not be reproduced or used without the consent of EXM
Ce dessin est confidentiel et ne doit pas être reproduit ou utilisé sans le consentement de EXM

No.	Revisions	Date	By/Par

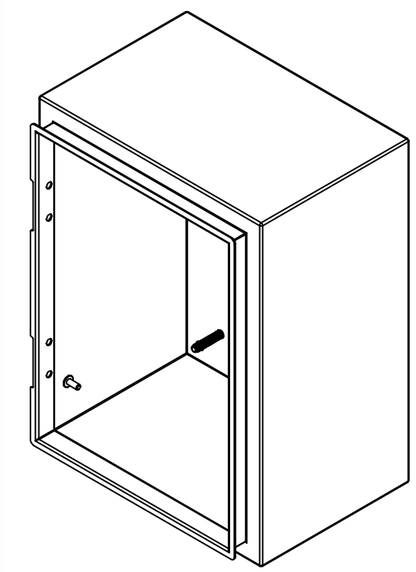

Isometric View

Tél: (450) 979-4373
Fax: (450) 979-4626
www.exmweb.com

Flatness / Aplatissement: Max 3.0mm

Projection

Customer / Client		Date	
Drawn By / Dessiné Par	BoxCad: BoxCad	Date	04-Apr-23
Material / Matière	16 Ga Cold Rolled A1008 CS Type B (1.4mm)		
Color / Couleur	Asa-61 Grey	Finish / Fini	Smooth
Description	5412ESBU 16" x 12" x 8" Body	Detail Rev.	
Part Number / Numéro Pièce	**5412ESBU161208NOIPB**	Rev. **0**	6 / 9

Qty	Part Number	Rev	Description
1	STK-Q-16080	0	Ground Stud M6 x 16mm Steel
1	STK-P-02400S	0	Powder Paint (Asa-61 Grey / Smooth)
4	STK-Q-16005	1	Stud M8 x 35 (No Paint Cap Required)
1	5412ESBU161208NOIPB-P	0	5412ESBU 16" x 12" x 8" Body Part

Parts List

This drawing is confidential and must not be reproduced or used without the consent of EXM

Ce dessin est confidentiel et ne doit pas être reproduit ou utilisé sans le consentement de EXM

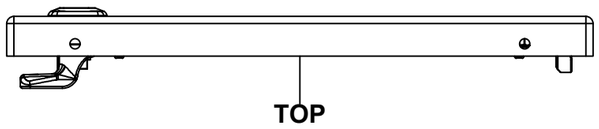

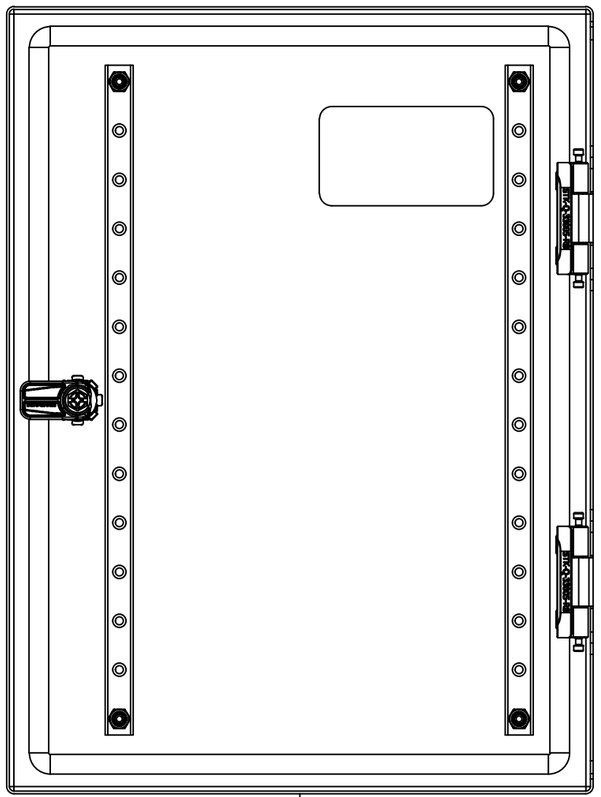

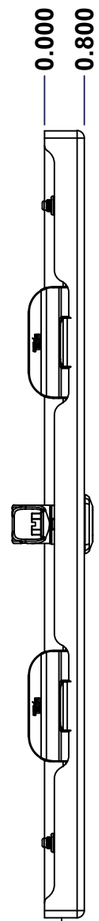

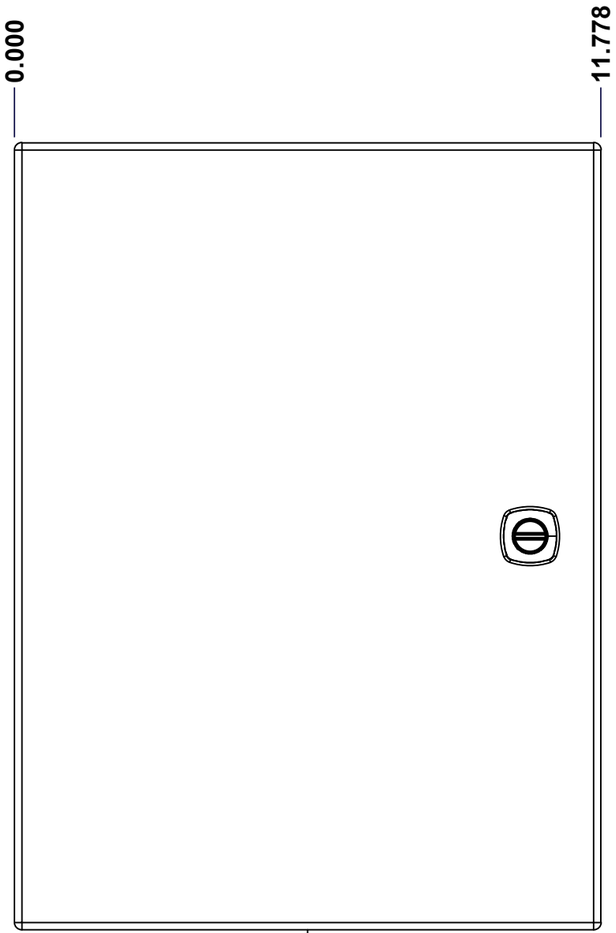

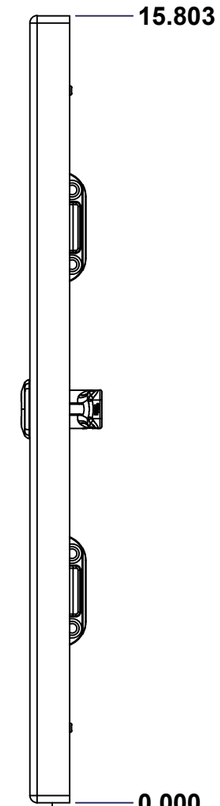

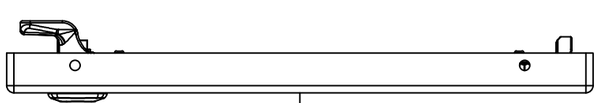

SEE BILL OF MATERIAL ON LAST PAGE

No.	Revisions	Date	By/Par

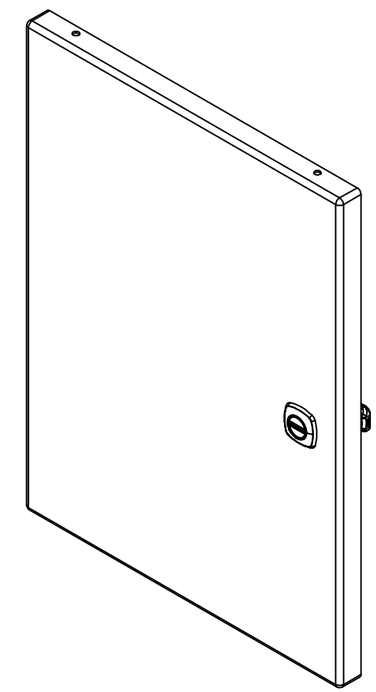

Isometric View

Tél: (450) 979-4373
Fax: (450) 979-4626
www.exmweb.com

Flatness / Aplatissement: Max 3.0mm

Projection

Customer / Client		Date	
Drawn By / Dessiné Par	BoxCad: BoxCad	Date	04-Apr-23
Material / Matière	16 Ga Cold Rolled A1008 CS Type B (1.4mm)		
Color / Couleur	Asa-61 Grey	Finish / Fini	Smooth
Description	5412ESBU 16" x 12" Cover	Detail Rev.	
Part Number / Numéro Pièce	5412ESBU161208NOIPC	Rev.	0

This drawing is confidential and must not be reproduced or used without the consent of EXM

Ce dessin est confidentiel et ne doit pas être reproduit ou utilisé sans le consentement de EXM

STANDARD FEATURES ARE NOT LISTED IN THIS HOLE TABLE

HOLE TABLE - FRONT VIEW (CUSTOM FEATURE ONLY)

CUT-OUT	XDIM	YDIM	DESCRIPTION
1	1.486	1.504	STUD M6 x 18mm (Inside)
2	1.486	14.299	STUD M6 x 18mm (Inside)
3	9.517	14.299	STUD M6 x 18mm (Inside)
4	9.517	1.504	STUD M6 x 18mm (Inside)
---	---	---	---
5	1.486	1.504	GND STUD M6 x 16mm (Inside)
6	3.750	12.803	LABEL_EXM (Inside)
7	10.354	7.902	880 SCQ4-SL

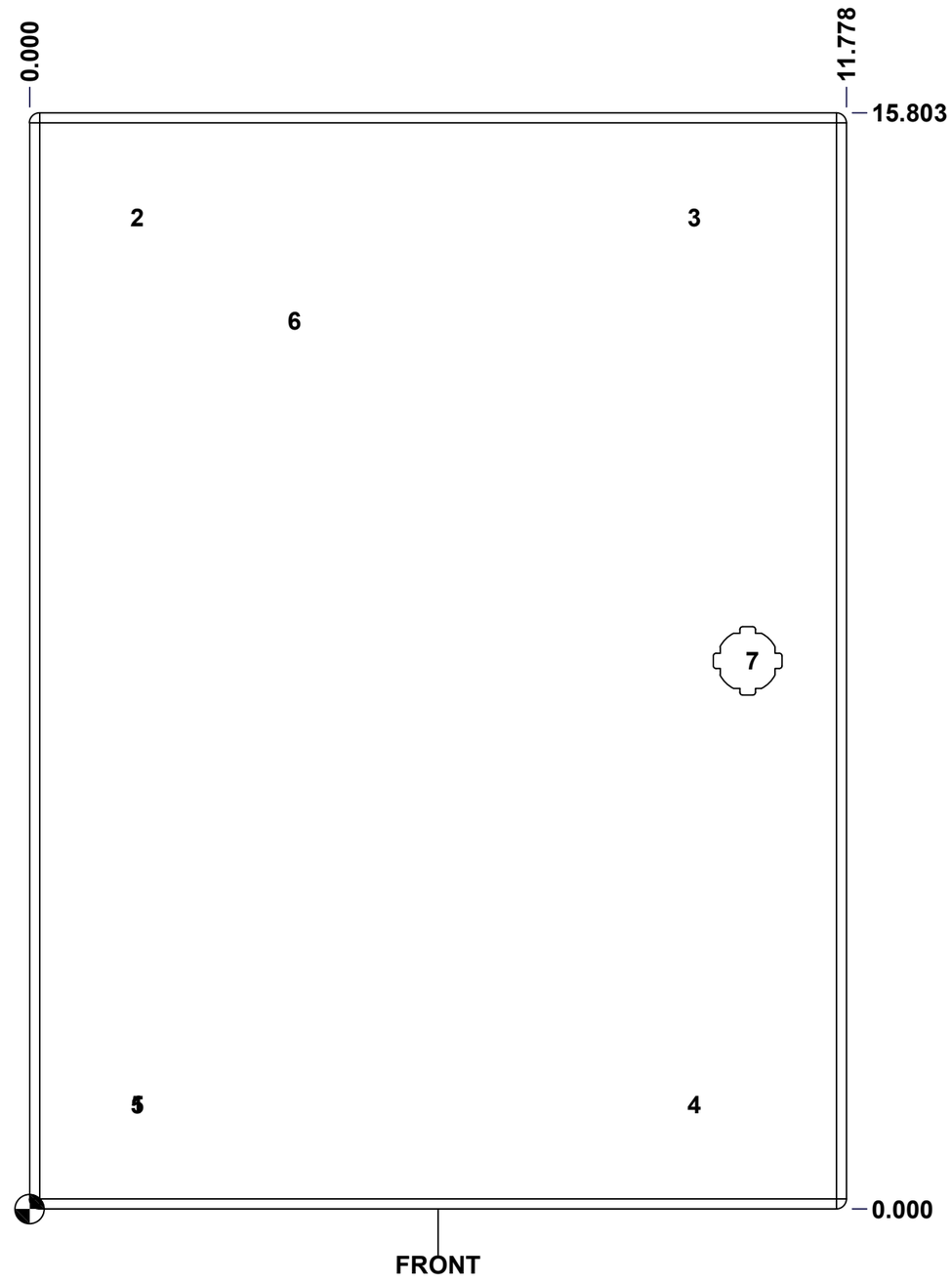

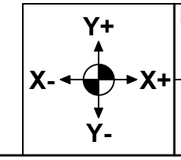

Description	Status
5412ESBU 16" x 12" Cover	(NULL)
Part Number / Numéro Pièce: **5412ESBU161208NOIPC**	Rev. **0**

This drawing is confidential and must not be reproduced or used without the consent of EXM
Ce dessin est confidentiel et ne doit pas être reproduit ou utilisé sans le consentement de EXM

No.	Revisions	Date	By/Par

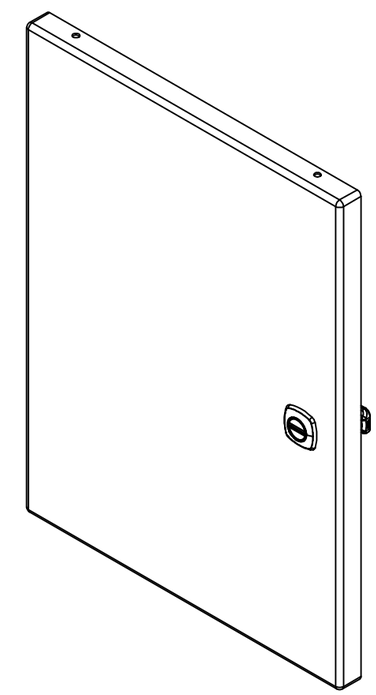

Isometric View

QTY	Part Number	Rev	Description
1	STK-K-12500	16	5412 ES 1/4 Turn Lock
1	STK-S-00100	0	3.5" x 2" Silver Milar Flexcon Sticker
1	STK-Q-16080	0	Ground Stud M6 x 16mm Steel
1	STK-P-02400S	0	Powder Paint (Asa-61 Grey / Smooth)
2	STK-Q-46020-16	5	5412 ES Vertical Door Stiffener 16"
4	STK-Q-16055	1	M6 x 18mm Stud (No Paint Cap Required)
2	STK-A-33005	4	5412 ESBU Hinge 180° (Body Part)
1	5412ESBU161208NOIPG	0	5412ESBU 16" x 12" Cover Gasket Part
1	5412ESBU161208NOIPC-P	0	5412ESBU 16" x 12" Cover Part
4	STK-Q-07220	1	M6 Nylon Insert Lock Nut

Parts List

Tél: (450) 979-4373
Fax: (450) 979-4626
www.exmweb.com

Flatness / Aplatissement: Max 3.0mm

Projection

Customer / Client		Date	
Drawn By / Dessiné Par	BoxCad: BoxCad	Date	04-Apr-23
Material / Matière	16 Ga Cold Rolled A1008 CS Type B (1.4mm)		
Color / Couleur	Asa-61 Grey	Finish / Fini	Smooth
Description	5412ESBU 16" x 12" Cover	Detail Rev.	
Part Number / Numéro Pièce	**5412ESBU161208NOIPC**	Rev. **0**	9 / 9