This drawing is confidential and must not be reproduced or used without the consent of EXM

Ce dessin est confidentiel et ne doit pas être reproduit ou utilisé sans le consentement de EXM

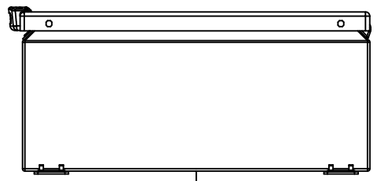

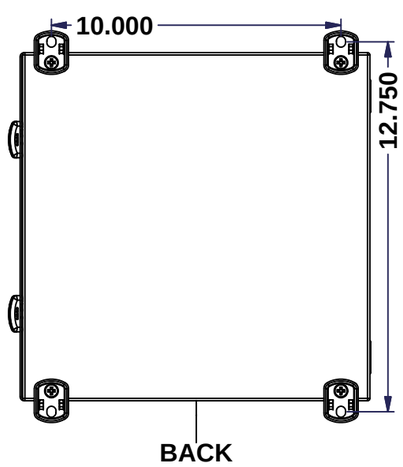

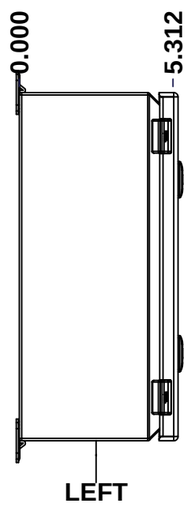

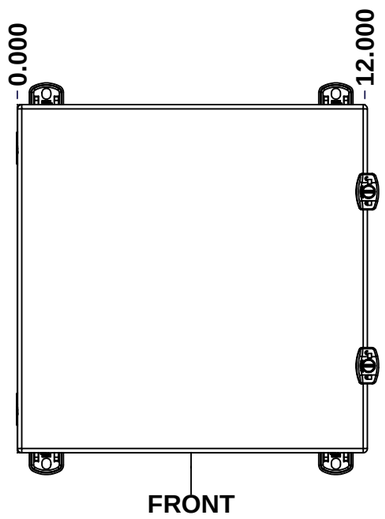

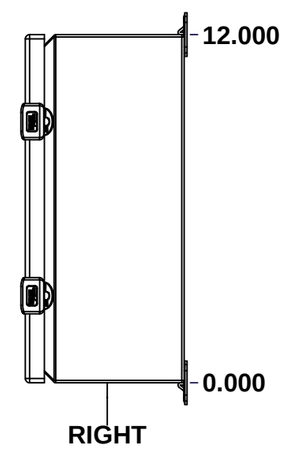

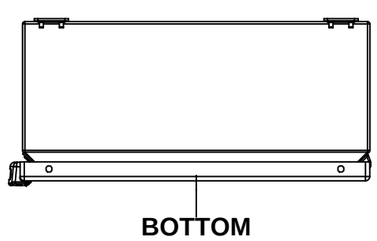

No.	Revisions	Date	By/Par

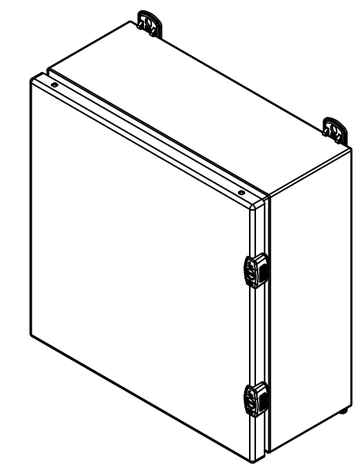

Isometric View

Tél: (450) 979-4373
Fax: (450) 979-4626
www.exmweb.com

Flatness
Aplatissement
Max 3.0mm

Projection

Customer Client		Date	
Drawn By Dessiné Par	BoxCad: BoxCad	Date	20-Nov-13
Material Matière	16 Ga Cold Rolled A1008 CS Type B (1.4mm)		
Color Couleur	Light Grey RAL7035	Finish Fini	Rough Textured
Description 5412ESCHB 12" x 12" x 5" Assembly		Detail Rev.	
Part Number Numéro Pièce **5412ESCHB121205**		Rev. **0**	1 / 2

SEE BILL OF MATERIAL ON LAST PAGE

This drawing is confidential and must not be reproduced or used without the consent of EXM

Ce dessin est confidentiel et ne doit pas être reproduit ou utilisé sans le consentement de EXM

NOTE

ITEM	DESCRIPTION
1	NEMA 4/12 Enclosure
2	C/W Standard ground standoffs on box and cover
3	W/O Standard door stiffener
4	C/W Standard inner panel (Included)
5	C/W Standard inner panel mounting standoffs

No.	Revisions	Date	By/Par

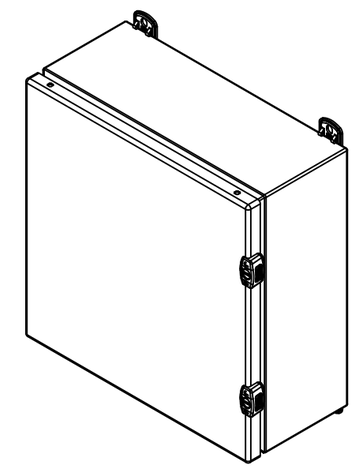

Isometric View

PACKING

ITEM	QTY	DESCRIPTION
STK-E-04318	1	CARTON 5412 ESCH121205
Plastic bag	1	To protect cover surface and inside gasket
Packaging label	1	White label with product number
STK-S-01100	1	ESCH EXM SQUARE STICKER

Qty	Part Number	Rev	Description
1	5412ESCHB121205C	0	5412ESCHB 12" x 12" Cover
1	880 SP1212G	0	880 SP1212G - Inner Panel
1	STK-K-02940	2	5412 ESCHB Accessory Kit
1	5412ESCHB121205B	0	5412ESCHB 12" x 12" x 5" Body
2	STK-Q-08100	1	M5 Nylon Insert Lock Nut

Parts List

Tél: (450) 979-4373
Fax: (450) 979-4626
www.exmweb.com

Flatness / Aplatissement: Max 3.0mm

Projection

Customer / Client		Date	
Drawn By / Dessiné Par	BoxCad: BoxCad	Date	20-Nov-13
Material / Matière	16 Ga Cold Rolled A1008 CS Type B (1.4mm)		
Color / Couleur	Light Grey RAL7035	Finish / Fini	Rough Textured
Description	5412ESCHB 12" x 12" x 5" Assembly	Detail Rev.	
Part Number / Numéro Pièce	**5412ESCHB121205**	Rev.	**0**

This drawing is confidential and must not be reproduced or used without the consent of EXM

Ce dessin est confidentiel et ne doit pas être reproduit ou utilisé sans le consentement de EXM

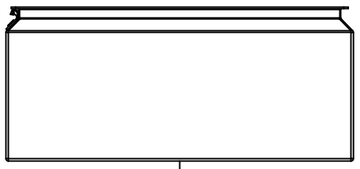

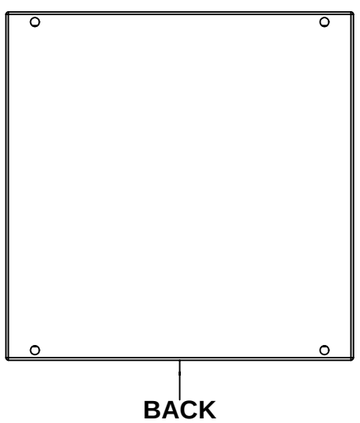

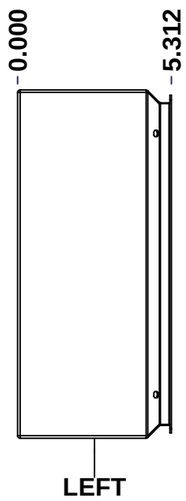

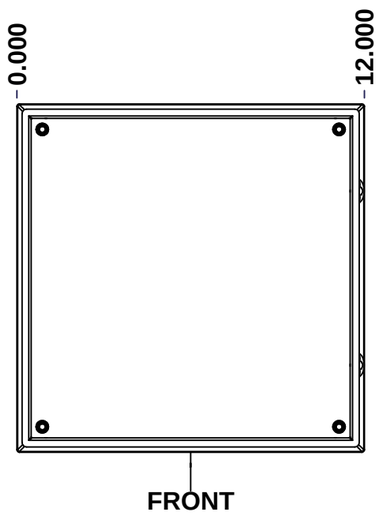

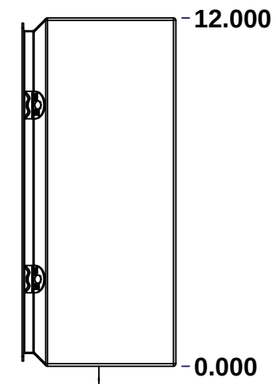

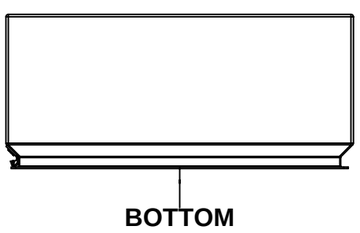

SEE BILL OF MATERIAL ON LAST PAGE

No.	Revisions	Date	By/Par

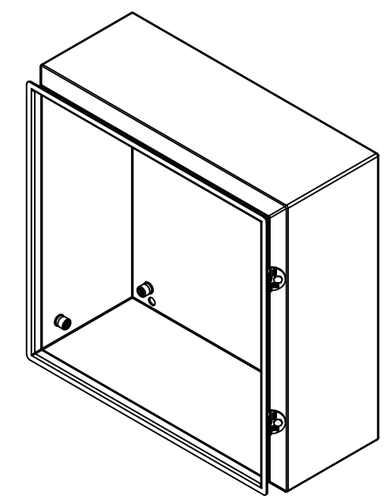

Isometric View

Tél: (450) 979-4373
Fax: (450) 979-4626
www.exmweb.com

Flatness / Aplatissement: Max 3.0mm

Projection

Customer / Client		Date	
Drawn By / Dessiné Par	BoxCad: BoxCad	Date	20-Nov-13
Material / Matière	16 Ga Cold Rolled A1008 CS Type B (1.4mm)		
Color / Couleur	Light Grey RAL7035	Finish / Fini	Rough Textured
Description	5412ESCHB 12" x 12" x 5" Body	Detail Rev.	
Part Number / Numéro Pièce	**5412ESCHB121205B**	Rev.	**0**

This drawing is confidential and must not be reproduced or used without the consent of EXM

Ce dessin est confidentiel et ne doit pas être reproduit ou utilisé sans le consentement de EXM

STANDARD FEATURES ARE NOT LISTED IN THIS HOLE TABLE

HOLE TABLE - LEFT VIEW (CUSTOM FEATURE ONLY)

CUT-OUT	XDIM	YDIM	DESCRIPTION
1	3.625	0.875	STANDOFF M6 x 10mm (Inside)

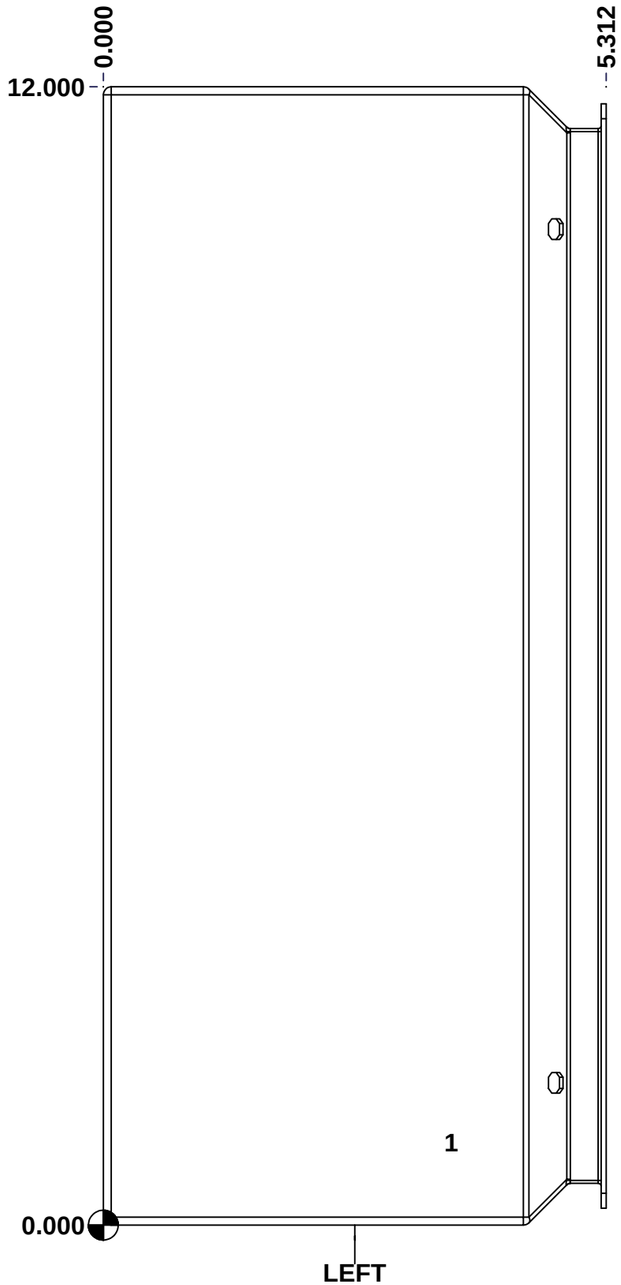

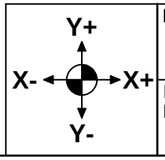

Description	Status
5412ESCHB 12" x 12" x 5" Body	(NULL)

Part Number / Numéro Pièce	Rev.	
5412ESCHB121205B	**0**	5 / 7

This drawing is confidential and must not be reproduced or used without the consent of EXM

Ce dessin est confidentiel et ne doit pas être reproduit ou utilisé sans le consentement de EXM

STANDARD FEATURES ARE NOT LISTED IN THIS HOLE TABLE

HOLE TABLE - BACK VIEW (CUSTOM FEATURE ONLY)

CUT-OUT	XDIM	YDIM	DESCRIPTION
1	0.875	0.875	IP STANDOFF M6 x 10mm (Inside)
2	0.875	11.125	IP STANDOFF M6 x 10mm (Inside)
3	11.125	11.125	IP STANDOFF M6 x 10mm (Inside)
4	11.125	0.875	IP STANDOFF M6 x 10mm (Inside)

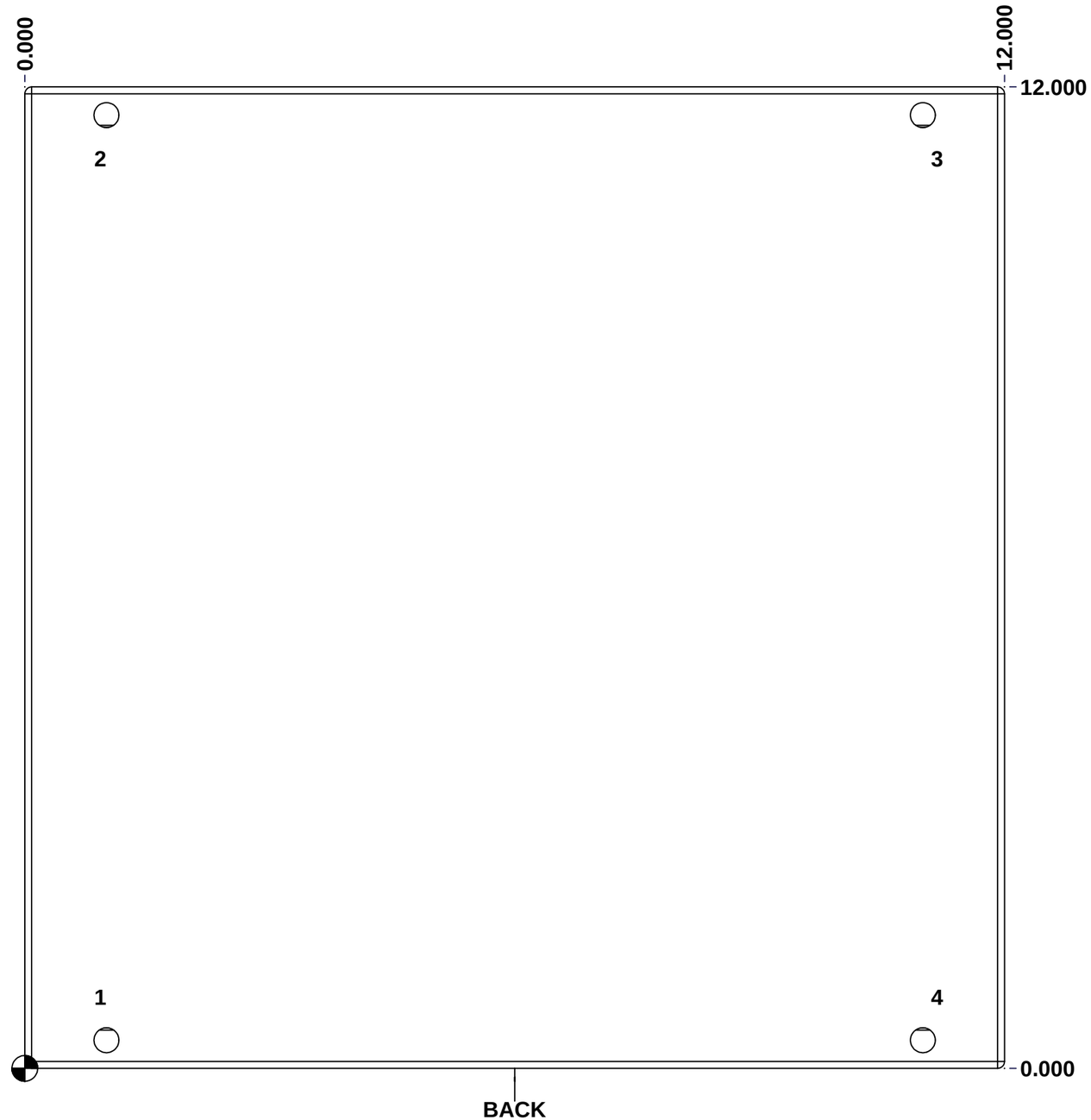

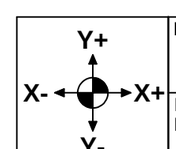

Description	Status
5412ESCHB 12" x 12" x 5" Body	(NULL)

Part Number / Numéro Pièce	Rev.	
5412ESCHB121205B	**0**	6 / 7

Tolerance ±1/32" unless otherwise specified

C:\Vault_Workspace\Inventor_Dwg\BoxCad\Result\5412ESCHB121205\5412ESCHB121205B.idw

Tolérance ±1/32" sauf spécification contraire

This drawing is confidential and must not be reproduced or used without the consent of EXM

Ce dessin est confidentiel et ne doit pas être reproduit ou utilisé sans le consentement de EXM

No.	Revisions	Date	By/Par

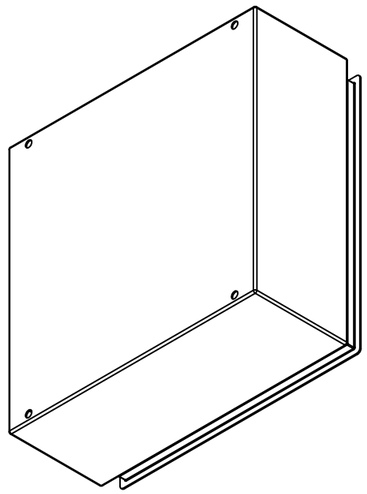

Isometric View

Tél: (450) 979-4373
Fax: (450) 979-4626
www.exmweb.com

Flatness
Aplatissement
Max 3.0mm

Projection

Customer Client		Date	
Drawn By Dessiné Par	BoxCad: BoxCad	Date	20-Nov-13
Material Matière	16 Ga Cold Rolled A1008 CS Type B (1.4mm)		
Color Couleur	Light Grey RAL7035	Finish Fini	Rough Textured
Description	5412ESCHB 12" x 12" x 5" Body	Detail Rev.	
Part Number Numéro Pièce	**5412ESCHB121205B**	Rev. **0**	7 / 7

Qty	Part Number	Rev	Description
1	STK-P-03820R	0	Powder Paint (Light Grey / Rough Textured)
1	5412ESCHB121205B-P	0	5412ESCHB 12" x 12" x 5" Body Part
2	STK-A-70469	6	5412 ESSMCH - Stainless Steel 316 Body Catch Assembly
2	STK-Q-08100	1	M5 Nylon Insert Lock Nut
5	STK-Q-08350	5	Standoff M6 x 10mm

Parts List

This drawing is confidential and must not be reproduced or used without the consent of EXM

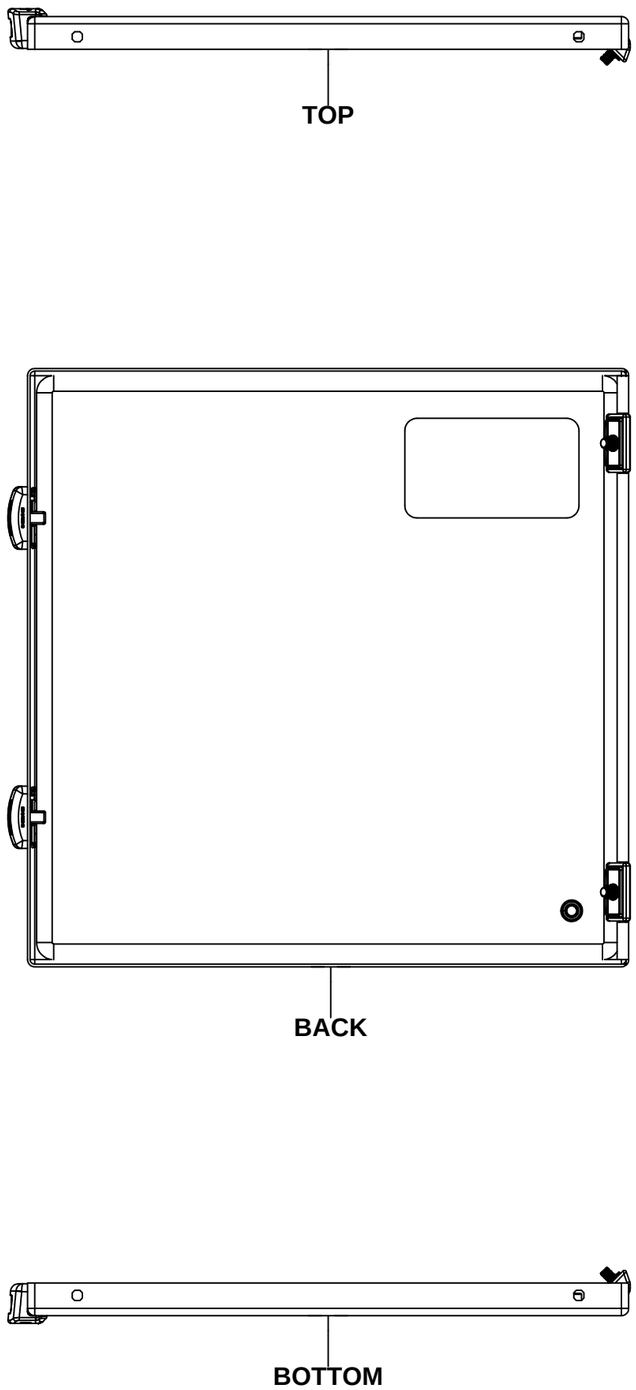

SEE BILL OF MATERIAL ON LAST PAGE

No.	Revisions	Date	By/Par

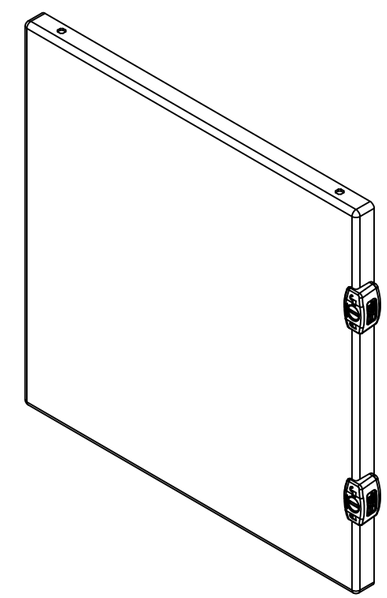

Isometric View

Ce dessin est confidentiel et ne doit pas être reproduit ou utilisé sans le consentement de EXM

Tél: (450) 979-4373
Fax: (450) 979-4626
www.exmweb.com

Flatness / Aplatissement: Max 3.0mm

Projection

Customer / Client		Date	
Drawn By / Dessiné Par	BoxCad: BoxCad	Date	20-Nov-13
Material / Matière	16 Ga Cold Rolled A1008 CS Type B (1.4mm)		
Color / Couleur	Light Grey RAL7035	Finish / Fini	Rough Textured
Description	5412ESCHB 12" x 12" Cover	Detail Rev.	
Part Number / Numéro Pièce	**5412ESCHB121205C**	Rev.	**0**

1 / 3

This drawing is confidential and must not be reproduced or used without the consent of EXM

Ce dessin est confidentiel et ne doit pas être reproduit ou utilisé sans le consentement de EXM

STANDARD FEATURES ARE NOT LISTED IN THIS HOLE TABLE

HOLE TABLE - FRONT VIEW (CUSTOM FEATURE ONLY)

CUT-OUT	XDIM	YDIM	DESCRIPTION
1	1.145	1.125	STANDOFF M6 x 10mm (Inside)
2	2.750	10.000	LABEL_EXM
3	12.080	9.000	LOCK 880 SCQ2MS @ 0.0°
4	12.080	3.000	LOCK 880 SCQ2MS @ 0.0°

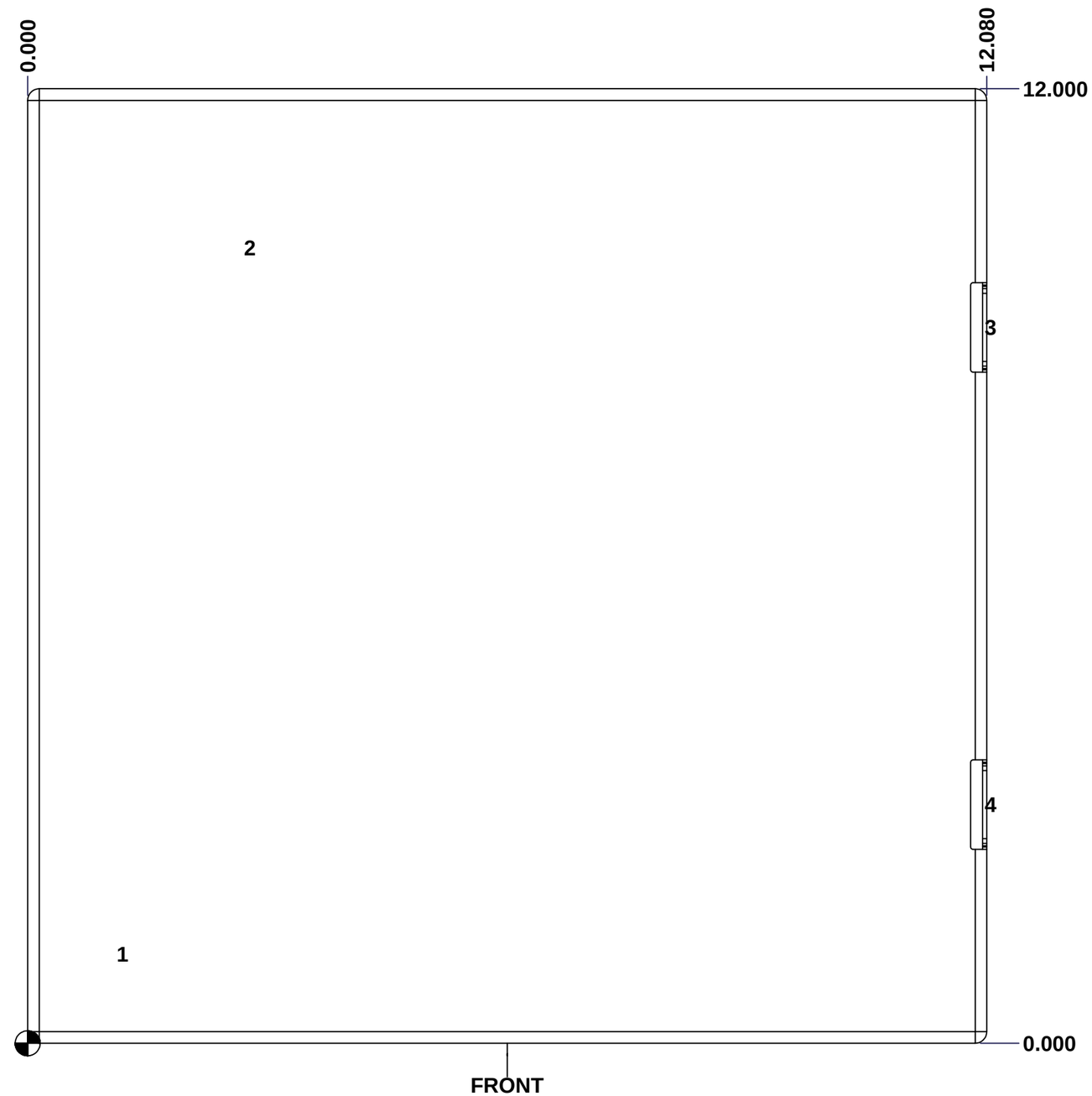

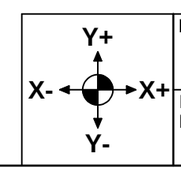

Description	Status
5412ESCHB 12" x 12" Cover	(NULL)

Part Number / Numéro Pièce	Rev.	
5412ESCHB121205C	**0**	2 / 3

This drawing is confidential and must not be reproduced or used without the consent of EXM

Ce dessin est confidentiel et ne doit pas être reproduit ou utilisé sans le consentement de EXM

No.	Revisions	Date	By/Par

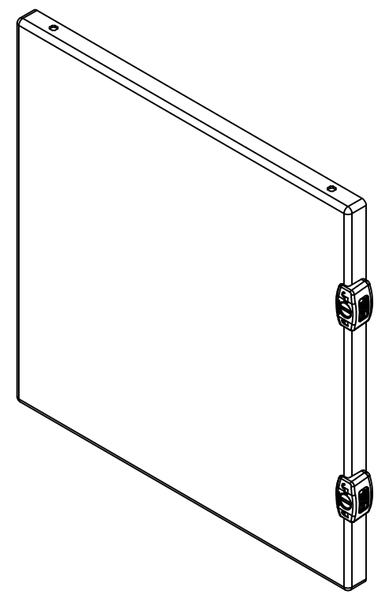

Isometric View

Qty	Part Number	Rev	Description
1	5412ESCHB121205G	0	5412ESCHB 12" x 12" Gasket
1	STK-S-00100	0	3.5" x 2" Silver Milar Flexcon Sticker
1	STK-Q-08350	5	Standoff M6 x 10mm
1	STK-P-03820R	0	Powder Paint (Light Grey / Rough Textured)
1	5412ESCHB121205C-P	0	5412ESCHB 12" x 12" Cover Part
2	STK-A-33033	4	5412 ESMCH Hinge
2	880SCQ2S	3	5412 ESMCH - External Lock Assy - Slot Lock

Parts List

Tél: (450) 979-4373
Fax: (450) 979-4626
www.exmweb.com

Flatness / Aplatissement: Max 3.0mm

Projection

Customer / Client:

Date:

Drawn By / Dessiné Par: BoxCad: BoxCad

Date: 20-Nov-13

Material / Matière: 16 Ga Cold Rolled A1008 CS Type B (1.4mm)

Color / Couleur: Light Grey RAL7035

Finish / Fini: Rough Textured

Description: 5412ESCHB 12" x 12" Cover

Detail Rev.:

Part Number / Numéro Pièce: **5412ESCHB121205C**

Rev.: **0**

3 / 3

This drawing is confidential and must not be reproduced or used without the consent of EXM

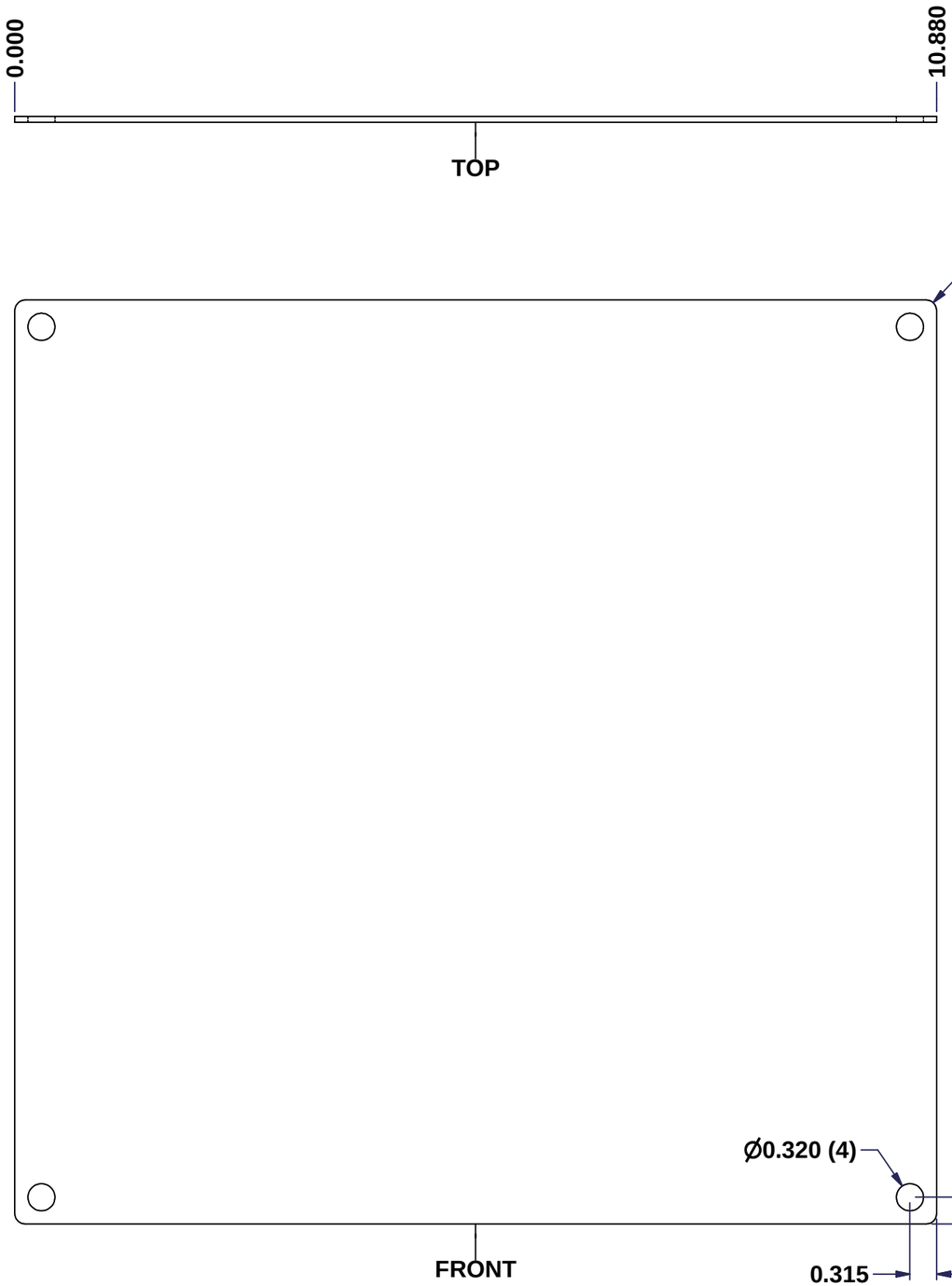

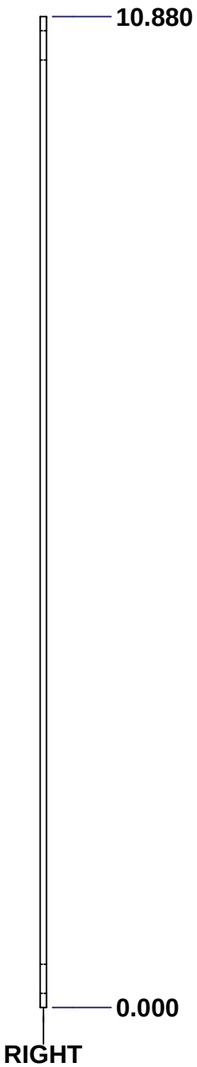

SEE BILL OF MATERIAL ON LAST PAGE

No.	Revisions	Date	By/Par

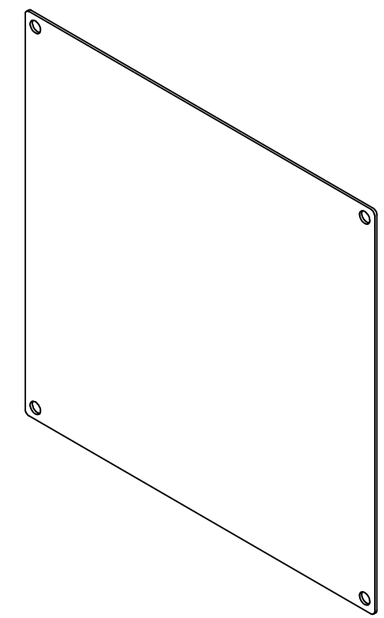

Isometric View

Ce dessin est confidentiel et ne doit pas être reproduit ou utilisé sans le consentement de EXM

Tél: (450) 979-4373
Fax: (450) 979-4626
www.exmweb.com

Flatness / Aplatissement: Max 3.0mm

Projection

Customer / Client		Date	
Drawn By / Dessiné Par	BoxCad	Date	23-Jan-07
Material / Matière	14 Ga Galvanized (1.7mm)		
Color / Couleur	Unpainted	Finish / Fini	Galvanized
Description	880 SP1212G - Inner Panel	Detail Rev.	
Part Number / Numéro Pièce	**880 SP1212G**	Rev. **0**	1 / 2

Tolerance ±1/32" unless otherwise specified

C:\Vault_Workspace\Inventor_Dwg\Inv-8\880SP\880SP1212G.idw

Tolérance ±1/32" sauf spécification contraire

This drawing is confidential and must not be reproduced or used without the consent of EXM

Ce dessin est confidentiel et ne doit pas être reproduit ou utilisé sans le consentement de EXM

No.	Revisions	Date	By/Par

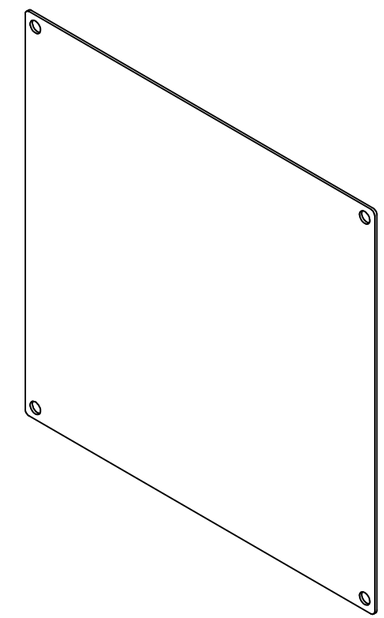

Isometric View

Tél: (450) 979-4373
Fax: (450) 979-4626
www.exmweb.com

Flatness
Aplatissement
Max 3.0mm

Projection

Customer
Client

Date

Drawn By
Dessiné Par
BoxCad

Date
23-Jan-07

Material
Matière
14 Ga Galvanized (1.7mm)

Color
Couleur
Unpainted

Finish
Fini
Galvanized

Description
880 SP1212G - Inner Panel

Detail Rev.

Part Number
Numéro Pièce
880 SP1212G

Rev.
0

2 / 2

Qty	Part Number	Rev	Description
1	880 SP1212G-P	0	880 SP1212G - Inner Panel Part

Parts List