This drawing is confidential and must not be reproduced or used without the consent of EXM

Ce dessin est confidentiel et ne doit pas être reproduit ou utilisé sans le consentement de EXM

No.	Revisions	Date	By/Par

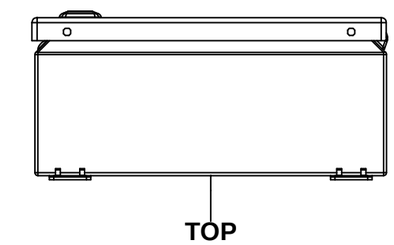

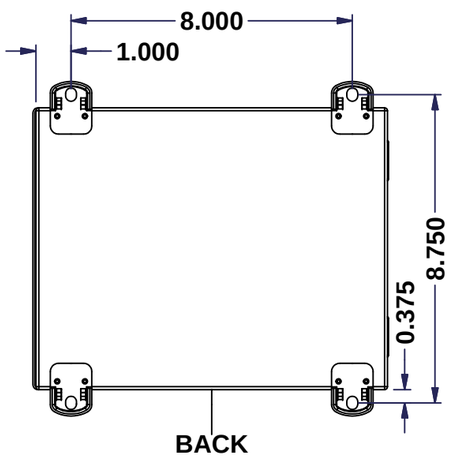

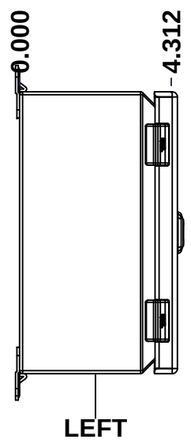

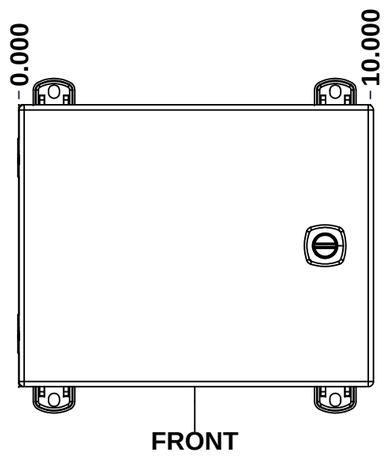

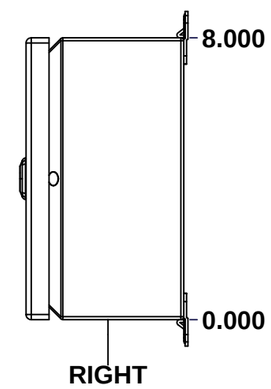

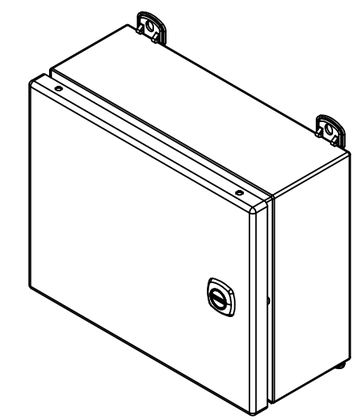

Isometric View

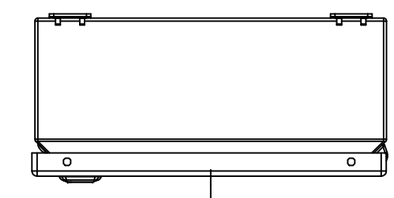

SEE BILL OF MATERIAL ON LAST PAGE

Tél: (450) 979-4373
Fax: (450) 979-4626
www.exmweb.com

Flatness
Aplatissement
Max 3.0mm

Projection

Customer / Client		Date	
Drawn By / Dessiné Par	BoxCad: BoxCad	Date	20-Aug-14
Material / Matière	16 Ga Cold Rolled A1008 CS Type B (1.4mm)		
Color / Couleur	Asa-61 Grey	Finish / Fini	Smooth
Description	5412ESM 8" x 10" x 4" Assembly	Detail Rev.	
Part Number / Numéro Pièce	**5412ESM081004**	Rev. **0**	1 / 2

This drawing is confidential and must not be reproduced or used without the consent of EXM

Ce dessin est confidentiel et ne doit pas être reproduit ou utilisé sans le consentement de EXM

NOTE

ITEM	DESCRIPTION
1	NEMA 4/12 Enclosure
2	C/W Standard ground standoffs on box and cover
3	W/O Standard door stiffener
4	C/W Standard inner panel (Included)
5	C/W Standard inner panel mounting standoffs
6	C/W 885 ESCHMF1 Mounting Feet (Welded)

No.	Revisions	Date	By/Par

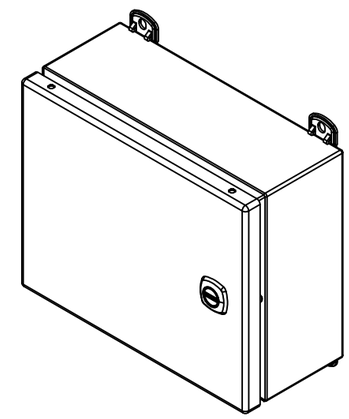

Isometric View

PACKING

ITEM	QTY	DESCRIPTION
STK-E-04309	1	CARTON 5412 ESCH081004
Plastic bag	1	To protect cover surface and inside gasket
Packaging label	1	White label with product number
STK-S-01100	1	ESCH EXM SQUARE STICKER

Parts List

Qty	Part Number	Rev	Description
1	5412ESM081004C	0	5412ESM 8" x 10" Cover
1	880 SP1008G	0	880 SP1008G - Inner Panel
1	STK-K-02910	3	5412 ESCH Accessory Kit
1	5412ESM081004B	0	5412ESM 8" x 10" x 4" Body
2	STK-Q-08100	1	M5 Nylon Insert Lock Nut

Tél: (450) 979-4373
Fax: (450) 979-4626
www.exmweb.com

Flatness / Aplatissement: Max 3.0mm

Projection

Customer / Client:

Date:

Drawn By / Dessiné Par: BoxCad: BoxCad

Date: 20-Aug-14

Material / Matière: 16 Ga Cold Rolled A1008 CS Type B (1.4mm)

Color / Couleur: Asa-61 Grey

Finish / Fini: Smooth

Description: 5412ESM 8" x 10" x 4" Assembly

Detail Rev.:

Part Number / Numéro Pièce: **5412ESM081004**

Rev.: **0**

2 / 2

This drawing is confidential and must not be reproduced or used without the consent of EXM
Ce dessin est confidentiel et ne doit pas être reproduit ou utilisé sans le consentement de EXM

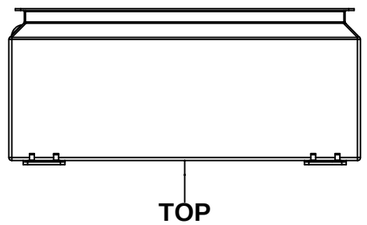

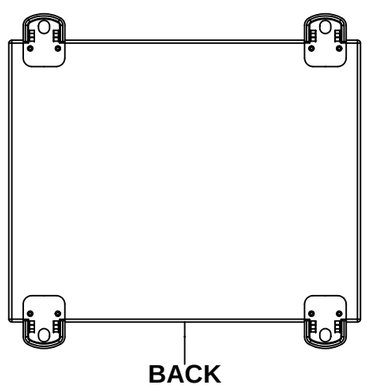

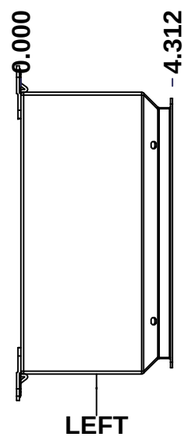

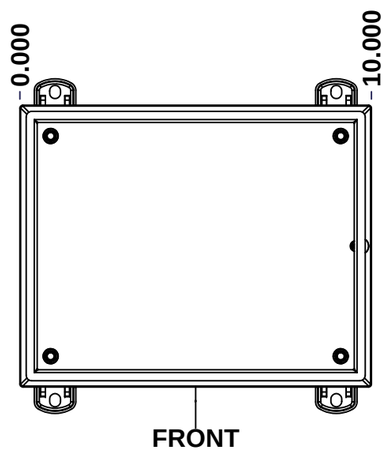

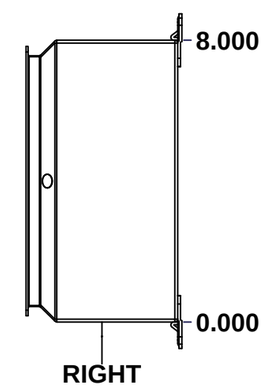

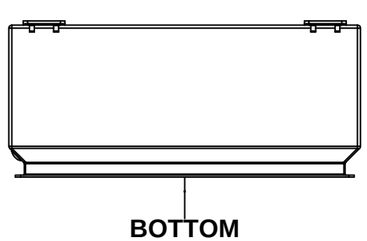

SEE BILL OF MATERIAL ON LAST PAGE

No.	Revisions	Date	By/Par

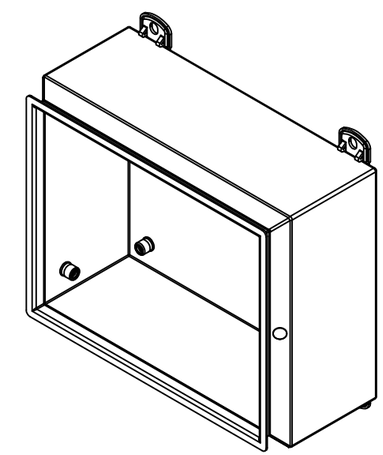

Isometric View

Tél: (450) 979-4373
Fax: (450) 979-4626
www.exmweb.com

Flatness / Aplatissement: Max 3.0mm

Projection

Customer / Client		Date	
Drawn By / Dessiné Par	BoxCad: BoxCad	Date	20-Aug-14
Material / Matière	16 Ga Cold Rolled A1008 CS Type B (1.4mm)		
Color / Couleur	Asa-61 Grey	Finish / Fini	Smooth
Description	5412ESM 8" x 10" x 4" Body	Detail Rev.	
Part Number / Numéro Pièce	**5412ESM081004B**	Rev.	**0**

This drawing is confidential and must not be reproduced or used without the consent of EXM

Ce dessin est confidentiel et ne doit pas être reproduit ou utilisé sans le consentement de EXM

STANDARD FEATURES ARE NOT LISTED IN THIS HOLE TABLE

HOLE TABLE - LEFT VIEW (CUSTOM FEATURE ONLY)

CUT-OUT	XDIM	YDIM	DESCRIPTION
1	2.625	0.875	STANDOFF M6 x 10mm (Inside)

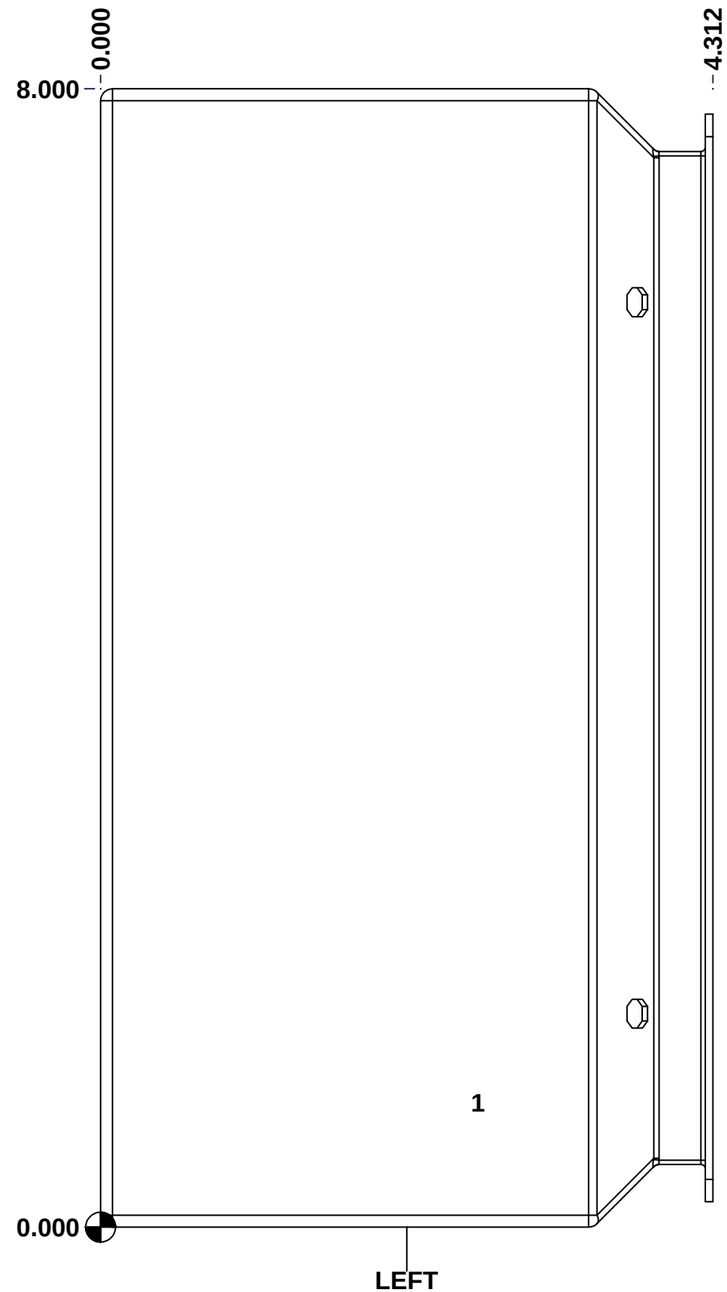

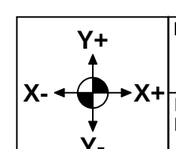

Description	Status
5412ESM 8" x 10" x 4" Body	(NULL)

Part Number / Numéro Pièce	Rev.	
5412ESM081004B	**0**	5 / 7

This drawing is confidential and must not be reproduced or used without the consent of EXM

Ce dessin est confidentiel et ne doit pas être reproduit ou utilisé sans le consentement de EXM

STANDARD FEATURES ARE NOT LISTED IN THIS HOLE TABLE

HOLE TABLE - BACK VIEW (CUSTOM FEATURE ONLY)

CUT-OUT	XDIM	YDIM	DESCRIPTION
1	0.875	0.875	IP STANDOFF M6 x 10mm (Inside)
2	0.875	7.125	IP STANDOFF M6 x 10mm (Inside)
3	9.125	7.125	IP STANDOFF M6 x 10mm (Inside)
4	9.125	0.875	IP STANDOFF M6 x 10mm (Inside)
---	---	---	---
5	9.000	0.000	FOOT 885 ESCHMF1
6	1.000	0.000	FOOT 885 ESCHMF1
7	9.000	8.000	FOOT 885 ESCHMF1
8	1.000	8.000	FOOT 885 ESCHMF1

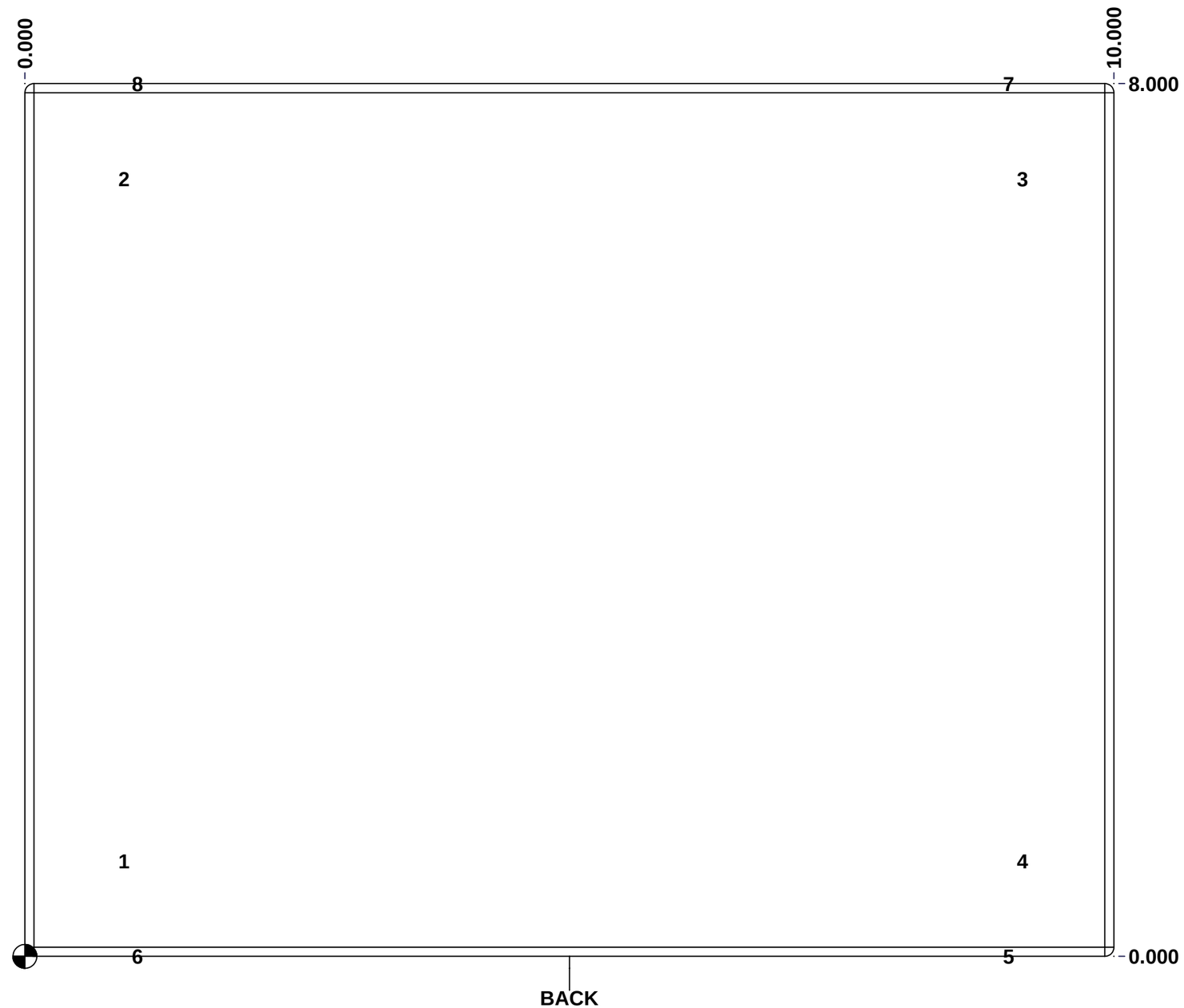

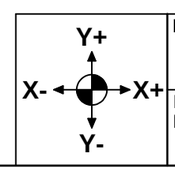

Description	Status
5412ESM 8" x 10" x 4" Body	(NULL)

Part Number / Numéro Pièce	Rev.	
5412ESM081004B	**0**	6 / 7

Tolerance ±1/32" unless otherwise specified

C:\Vault_Workspace\Inventor_Dwg\BoxCad\Result\5412ESM081004\5412ESM081004B.idw

Tolérance ±1/32" sauf spécification contraire

This drawing is confidential and must not be reproduced or used without the consent of EXM

Ce dessin est confidentiel et ne doit pas être reproduit ou utilisé sans le consentement de EXM

No.	Revisions	Date	By/Par

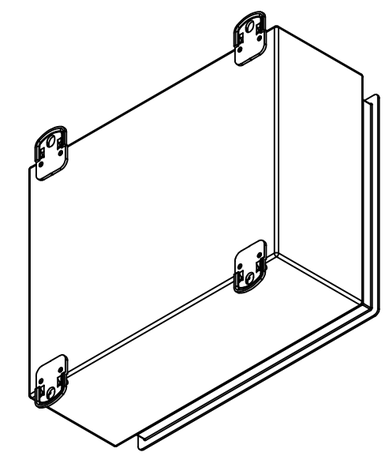

Isometric View

Tél: (450) 979-4373
Fax: (450) 979-4626
www.exmweb.com

Flatness
Aplatissement
Max 3.0mm

Projection

Customer
Client

Date

Drawn By
Dessiné Par
BoxCad: BoxCad

Date 20-Aug-14

Material
Matière
16 Ga Cold Rolled A1008 CS Type B (1.4mm)

Color
Couleur
Asa-61 Grey

Finish
Fini
Smooth

Description
5412ESM 8" x 10" x 4" Body

Detail Rev.

Part Number
Numéro Pièce
5412ESM081004B

Rev.
0

7 / 7

Qty	Part Number	Rev	Description
1	STK-Q-08112	3	M5 Stainless Steel 304 Nylon Insert Dome Nut
4	STK-Q-71305	3	5412 ESMCH Stamped Mounting Foot
1	STK-Q-00200	0	M5 x 8mm Stainless Steel 316 Carriage Bolt with Nyseal
1	STK-P-02400S	0	Powder Paint (Asa-61 Grey / Smooth)
1	5412ESM081004B-P	0	5412ESM 8" x 10" x 4" Body Part
5	STK-Q-08350	5	Standoff M6 x 10mm

Parts List

This drawing is confidential and must not be reproduced or used without the consent of EXM

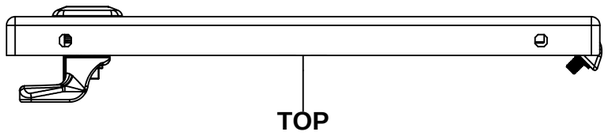

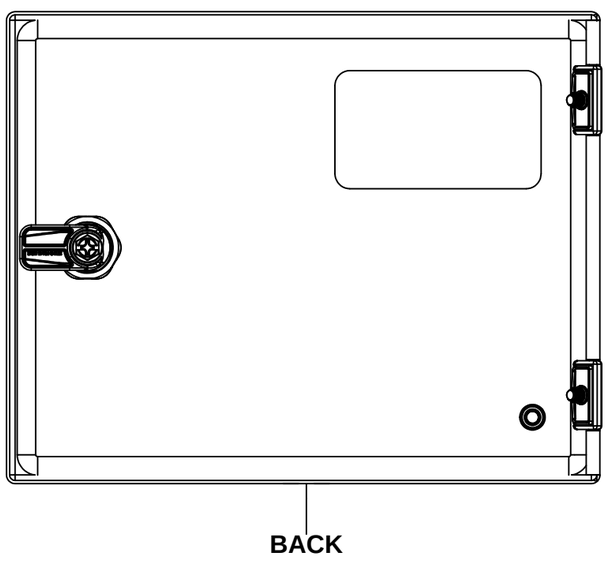

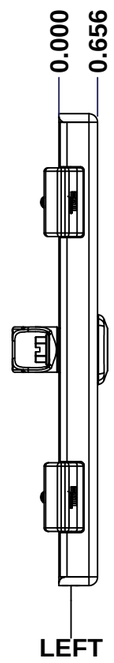

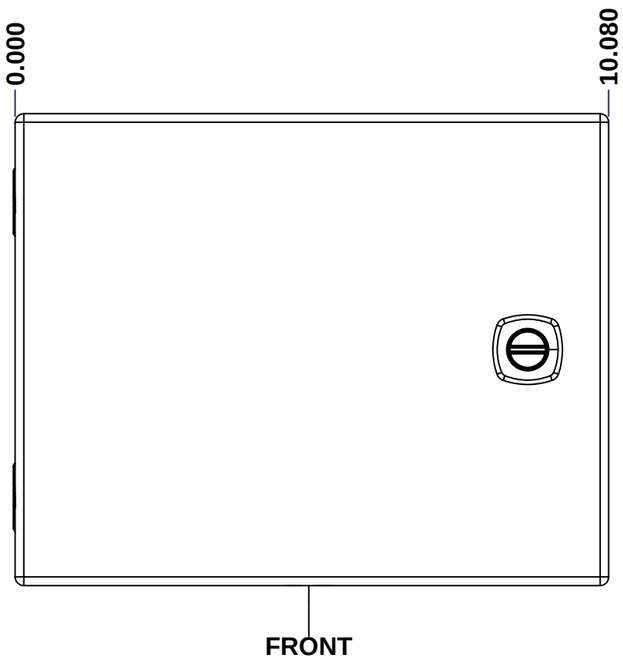

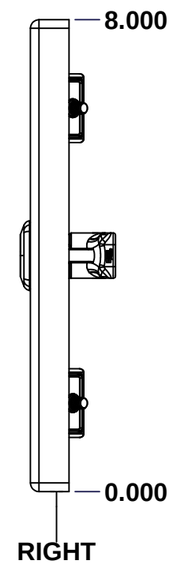

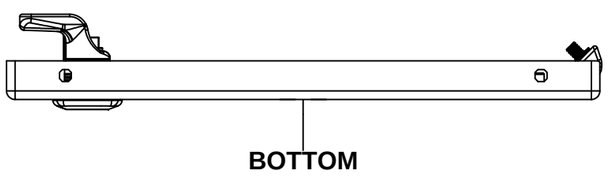

SEE BILL OF MATERIAL ON LAST PAGE

No.	Revisions	Date	By/Par

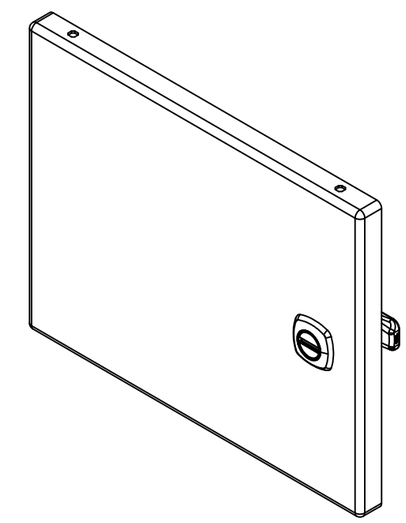

Isometric View

Ce dessin est confidentiel et ne doit pas être reproduit ou utilisé sans le consentement de EXM

Tél: (450) 979-4373
Fax: (450) 979-4626
www.exmweb.com

Flatness / Aplatissement: Max 3.0mm

Projection

Customer / Client		Date	
Drawn By / Dessiné Par	BoxCad: BoxCad	Date	20-Aug-14
Material / Matière	16 Ga Cold Rolled A1008 CS Type B (1.4mm)		
Color / Couleur	Asa-61 Grey	Finish / Fini	Smooth
Description	5412ESM 8" x 10" Cover	Detail Rev.	
Part Number / Numéro Pièce	**5412ESM081004C**	Rev. **0**	1 / 3

This drawing is confidential and must not be reproduced or used without the consent of EXM

Ce dessin est confidentiel et ne doit pas être reproduit ou utilisé sans le consentement de EXM

STANDARD FEATURES ARE NOT LISTED IN THIS HOLE TABLE

HOLE TABLE - FRONT VIEW (CUSTOM FEATURE ONLY)

CUT-OUT	XDIM	YDIM	DESCRIPTION
1	1.145	1.125	STANDOFF M6 x 10mm (Inside)
2	2.750	6.000	LABEL_EXM
3	8.705	4.000	LOCK 880 SCQ4-SL @ 0.0°

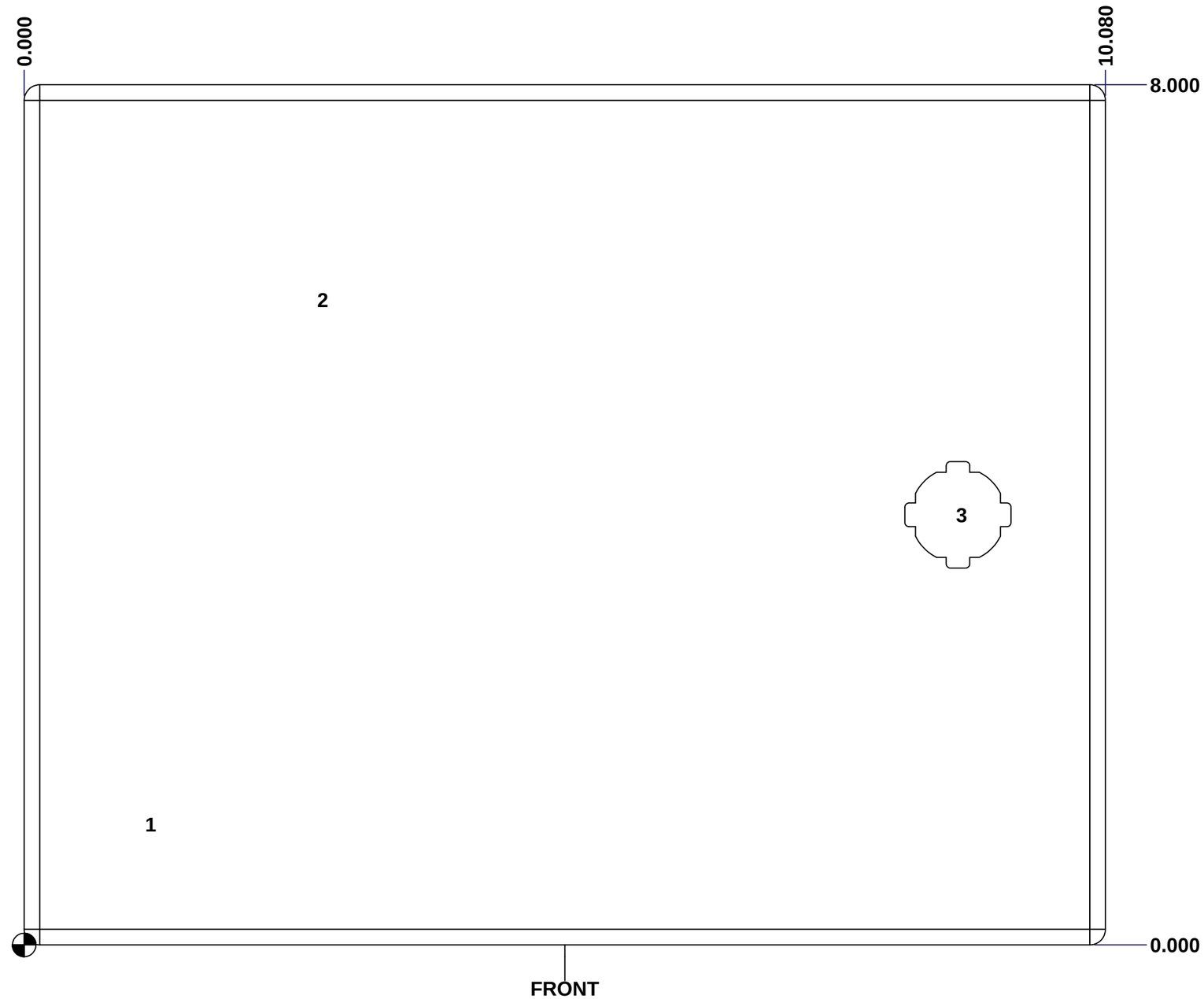

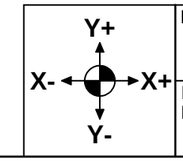

Description	Status
5412ESM 8" x 10" Cover	(NULL)

Part Number / Numéro Pièce	Rev.	
5412ESM081004C	0	2 / 3

Tolerance ±1/32" unless otherwise specified

C:\Vault_Workspace\Inventor_Dwg\BoxCad\Result\5412ESM081004\5412ESM081004C.idw

Tolérance ±1/32" sauf spécification contraire

This drawing is confidential and must not be reproduced or used without the consent of EXM

Ce dessin est confidentiel et ne doit pas être reproduit ou utilisé sans le consentement de EXM

No.	Revisions	Date	By/Par

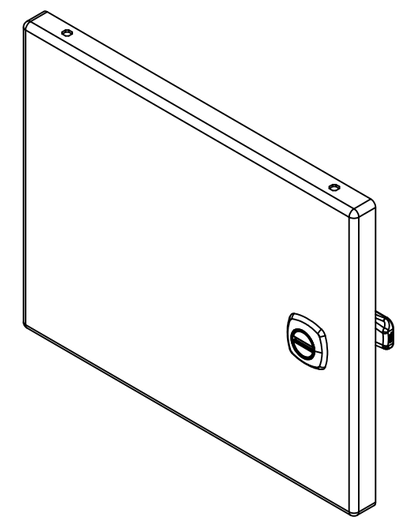

Isometric View

Tél: (450) 979-4373
Fax: (450) 979-4626
www.exmweb.com

Flatness / Aplatissement: Max 3.0mm

Projection

Customer / Client

Date

Drawn By / Dessiné Par: BoxCad: BoxCad

Date: 20-Aug-14

Material / Matière: 16 Ga Cold Rolled A1008 CS Type B (1.4mm)

Color / Couleur: Asa-61 Grey

Finish / Fini: Smooth

Description: 5412ESM 8" x 10" Cover

Detail Rev.

Part Number / Numéro Pièce: **5412ESM081004C**

Rev. **0**

3 / 3

Qty	Part Number	Rev	Description
1	880 SCQ4-SL	6	5412 ES 1/4 Turn Lock
1	5412ESM081004G	0	5412ESM 8" x 10" Gasket
1	STK-S-00100	0	3.5" x 2" Silver Milar Flexcon Sticker
1	STK-Q-08350	5	Standoff M6 x 10mm
1	STK-P-02400S	0	Powder Paint (Asa-61 Grey / Smooth)
1	5412ESM081004C-P	0	5412ESM 8" x 10" Cover Part
2	STK-A-33033	4	5412 ESMCH Hinge

Parts List

This drawing is confidential and must not be reproduced or used without the consent of EXM

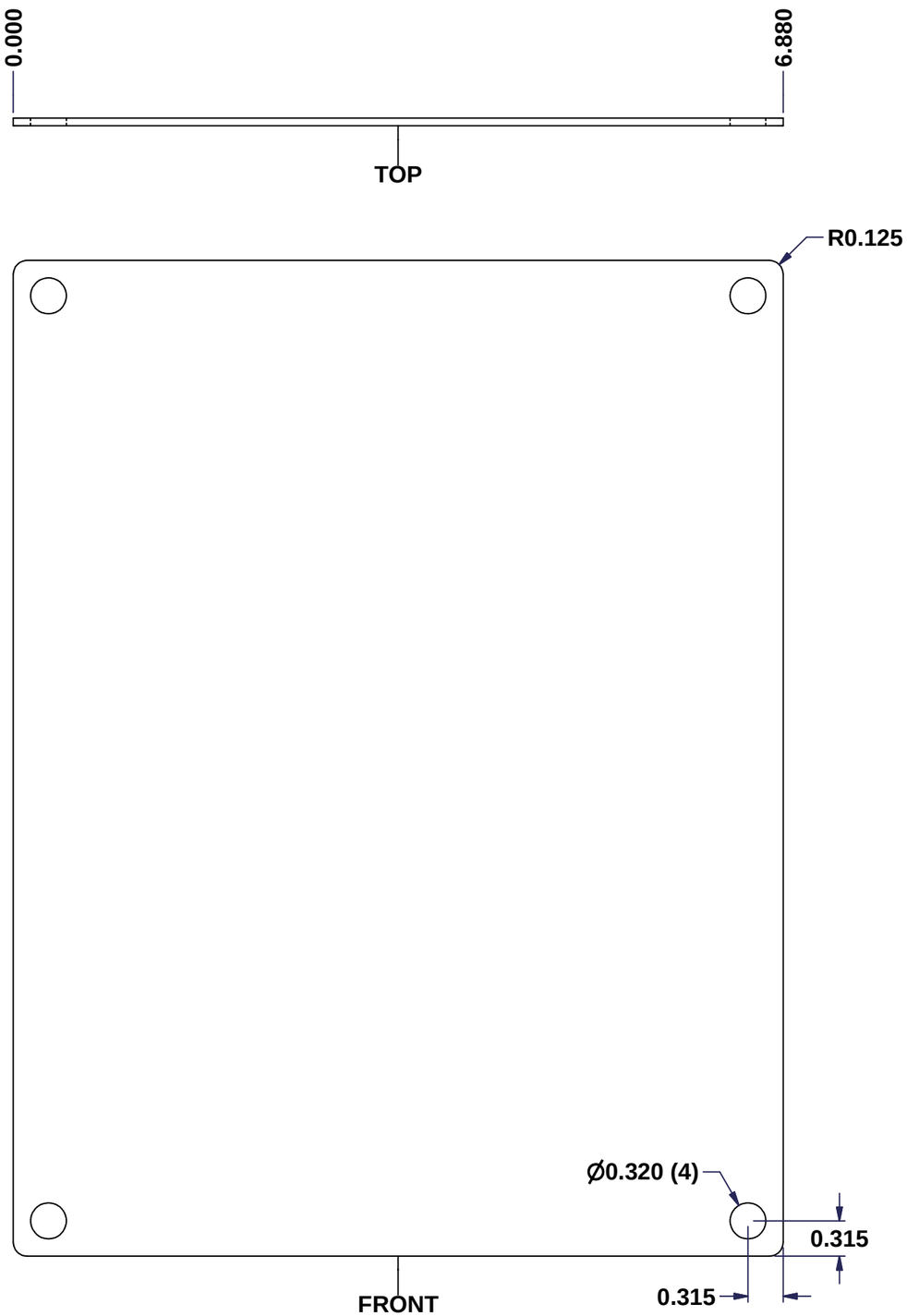

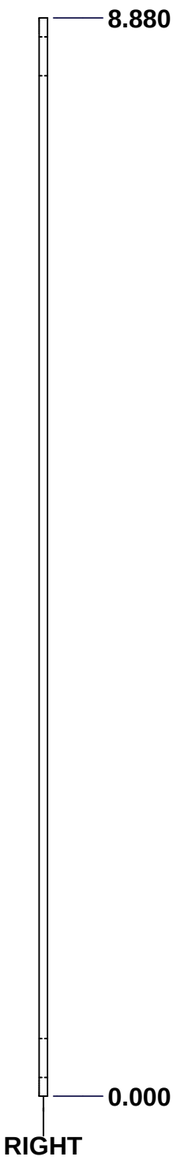

SEE BILL OF MATERIAL ON LAST PAGE

No.	Revisions	Date	By/Par

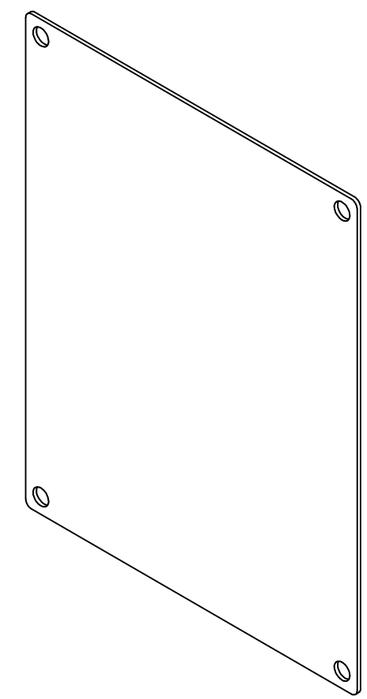

Isometric View

Tél: (450) 979-4373
Fax: (450) 979-4626
www.exmweb.com

Flatness / Aplatissement: Max 3.0mm

Projection

Customer / Client		Date	
Drawn By / Dessiné Par	BoxCad	Date	23-Jan-07
Material / Matière	14 Ga Galvanized (1.7mm)		
Color / Couleur	Unpainted	Finish / Fini	Galvanized
Description	880 SP1008G - Inner Panel	Detail Rev.	
Part Number / Numéro Pièce	880 SP1008G	Rev. 0	1 / 2

Ce dessin est confidentiel et ne doit pas être reproduit ou utilisé sans le consentement de EXM

Tolerance ±1/32" unless otherwise specified

C:\Vault_Workspace\Inventor_Dwg\Inv-8\880SP\880SP1008G.idw

Tolérance ±1/32" sauf spécification contraire

This drawing is confidential and must not be reproduced or used without the consent of EXM

Ce dessin est confidentiel et ne doit pas être reproduit ou utilisé sans le consentement de EXM

No.	Revisions	Date	By/Par

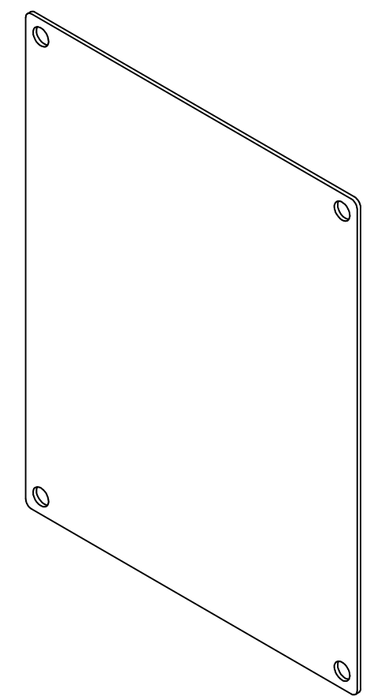

Isometric View

Tél: (450) 979-4373
Fax: (450) 979-4626
www.exmweb.com

Flatness
Aplatissement
Max 3.0mm

Projection

Customer Client		Date	
Drawn By Dessiné Par	BoxCad	Date	23-Jan-07
Material Matière	14 Ga Galvanized (1.7mm)		
Color Couleur	Unpainted	Finish Fini	Galvanized
Description	880 SP1008G - Inner Panel	Detail Rev.	
Part Number Numéro Pièce	**880 SP1008G**	Rev. **0**	2 / 2

Qty	Part Number	Rev	Description
1	880 SP1008G-P	0	880 SP1008G - Inner Panel Part

Parts List