This drawing is confidential and must not be reproduced or used without the consent of EXM

Ce dessin est confidentiel et ne doit pas être reproduit ou utilisé sans le consentement de EXM

No.	Revisions	Date	By/Par

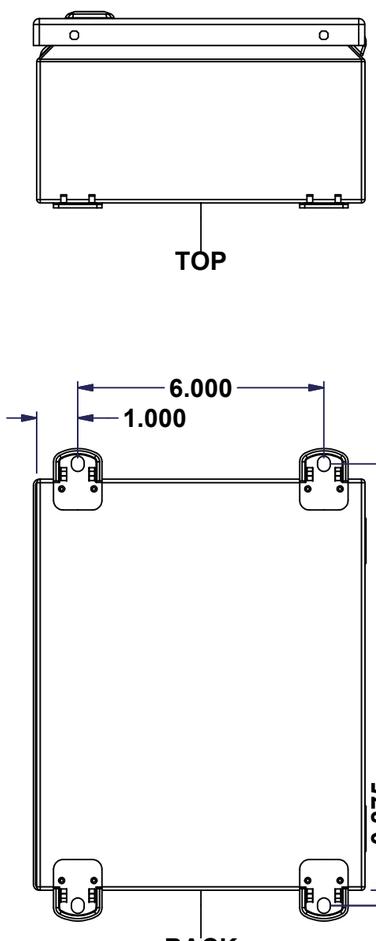

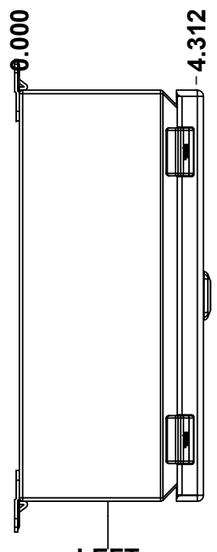

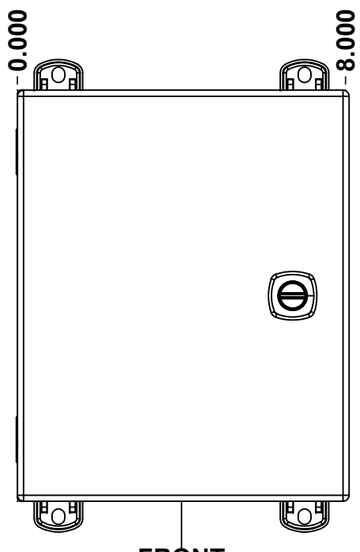

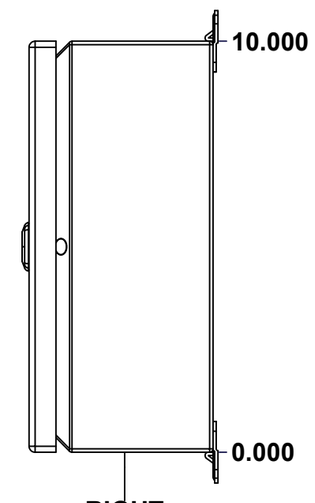

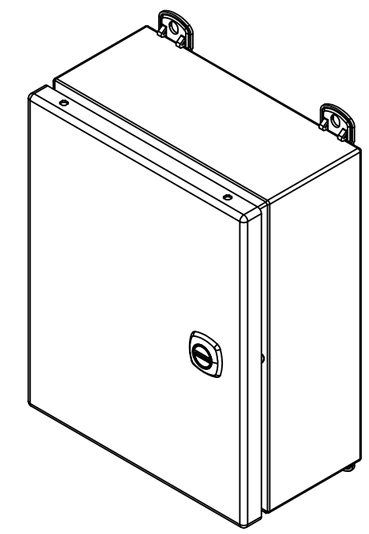

Isometric View

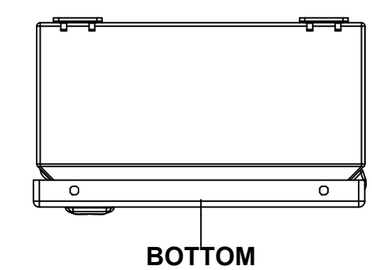

SEE BILL OF MATERIAL ON LAST PAGE

Tél: (450) 979-4373
Fax: (450) 979-4626
www.exmweb.com

Flatness
Aplatissement
Max 3.0mm

Projection

Customer Client		Date	
Drawn By Dessiné Par	BoxCad: BoxCad	Date	20-Aug-14
Material Matière	16 Ga Cold Rolled A1008 CS Type B (1.4mm)		
Color Couleur	Asa-61 Grey	Finish Fini	Smooth
Description 5412ESM 10" x 8" x 4" Assembly		Detail Rev.	
Part Number Numéro Pièce **5412ESM100804**		Rev. **0**	1 / 2

This drawing is confidential and must not be reproduced or used without the consent of EXM

Ce dessin est confidentiel et ne doit pas être reproduit ou utilisé sans le consentement de EXM

NOTE

ITEM	DESCRIPTION
1	NEMA 4/12 Enclosure
2	C/W Standard ground standoffs on box and cover
3	W/O Standard door stiffener
4	C/W Standard inner panel (Included)
5	C/W Standard inner panel mounting standoffs
6	C/W 885 ESCHMF1 Mounting Feet (Welded)

No.	Revisions	Date	By/Par

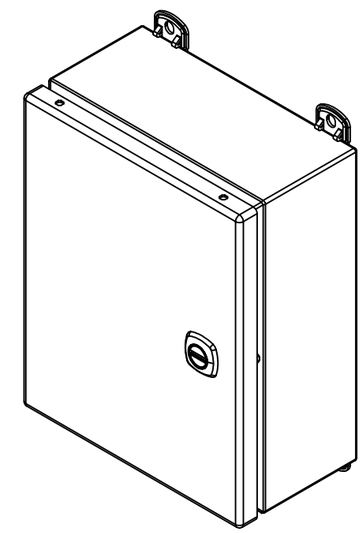

Isometric View

PACKING

ITEM	QTY	DESCRIPTION
STK-E-04310	1	CARTON 5412 ESCH100804
Plastic bag	1	To protect cover surface and inside gasket
Packaging label	1	White label with product number
STK-S-01100	1	ESCH EXM SQUARE STICKER

Parts List

Qty	Part Number	Rev	Description
1	5412ESM100804C	0	5412ESM 10" x 8" Cover
1	880 SP1008G	0	880 SP1008G - Inner Panel
1	STK-K-02910	3	5412 ESCH Accessory Kit
1	5412ESM100804B	0	5412ESM 10" x 8" x 4" Body
2	STK-Q-08100	1	M5 Nylon Insert Lock Nut

Tél: (450) 979-4373
Fax: (450) 979-4626
www.exmweb.com

Flatness / Aplatissement: Max 3.0mm

Projection

Customer / Client		Date	
Drawn By / Dessiné Par	BoxCad: BoxCad	Date	20-Aug-14
Material / Matière	16 Ga Cold Rolled A1008 CS Type B (1.4mm)		
Color / Couleur	Asa-61 Grey	Finish / Fini	Smooth
Description	5412ESM 10" x 8" x 4" Assembly	Detail Rev.	
Part Number / Numéro Pièce	**5412ESM100804**	Rev. **0**	2 / 2

This drawing is confidential and must not be reproduced or used without the consent of EXM

Ce dessin est confidentiel et ne doit pas être reproduit ou utilisé sans le consentement de EXM

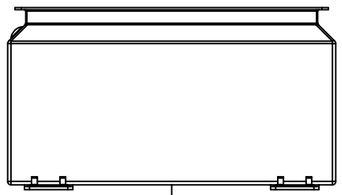

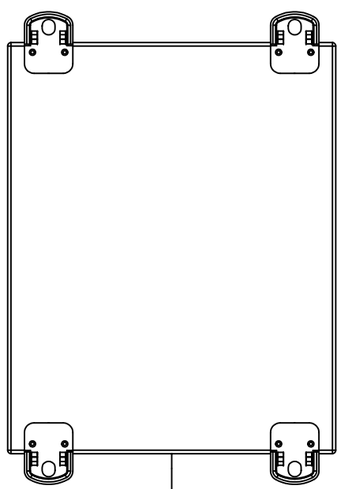

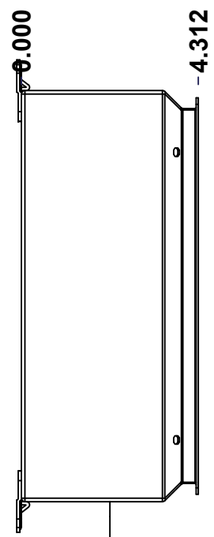

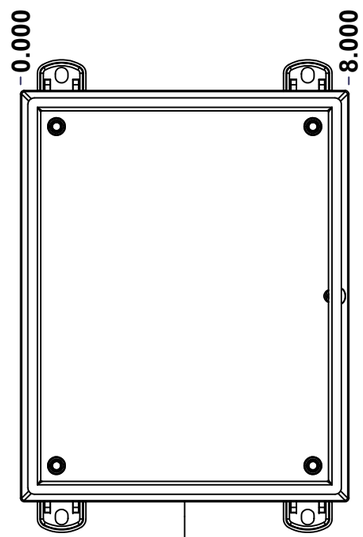

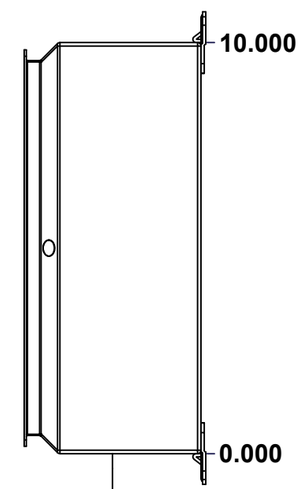

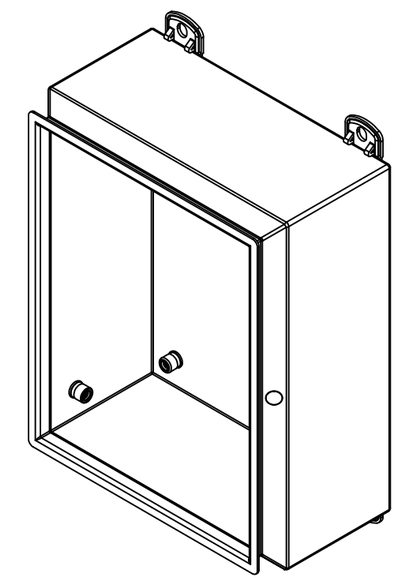

Isometric View

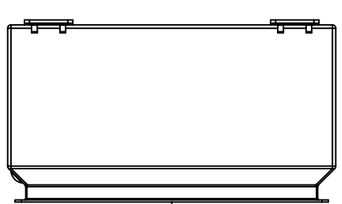

SEE BILL OF MATERIAL ON LAST PAGE

No.	Revisions	Date	By/Par

Tél: (450) 979-4373
Fax: (450) 979-4626
www.exmweb.com

Flatness / Aplatissement: Max 3.0mm

Projection

Customer / Client		Date	
Drawn By / Dessiné Par	BoxCad: BoxCad	Date	20-Aug-14
Material / Matière	16 Ga Cold Rolled A1008 CS Type B (1.4mm)		
Color / Couleur	Asa-61 Grey	Finish / Fini	Smooth
Description	5412ESM 10" x 8" x 4" Body	Detail Rev.	
Part Number / Numéro Pièce	**5412ESM100804B**	Rev.	**0**

This drawing is confidential and must not be reproduced or used without the consent of EXM

Ce dessin est confidentiel et ne doit pas être reproduit ou utilisé sans le consentement de EXM

STANDARD FEATURES ARE NOT LISTED IN THIS HOLE TABLE

HOLE TABLE - LEFT VIEW (CUSTOM FEATURE ONLY)

CUT-OUT	XDIM	YDIM	DESCRIPTION
1	2.625	0.875	STANDOFF M6 x 10mm (Inside)

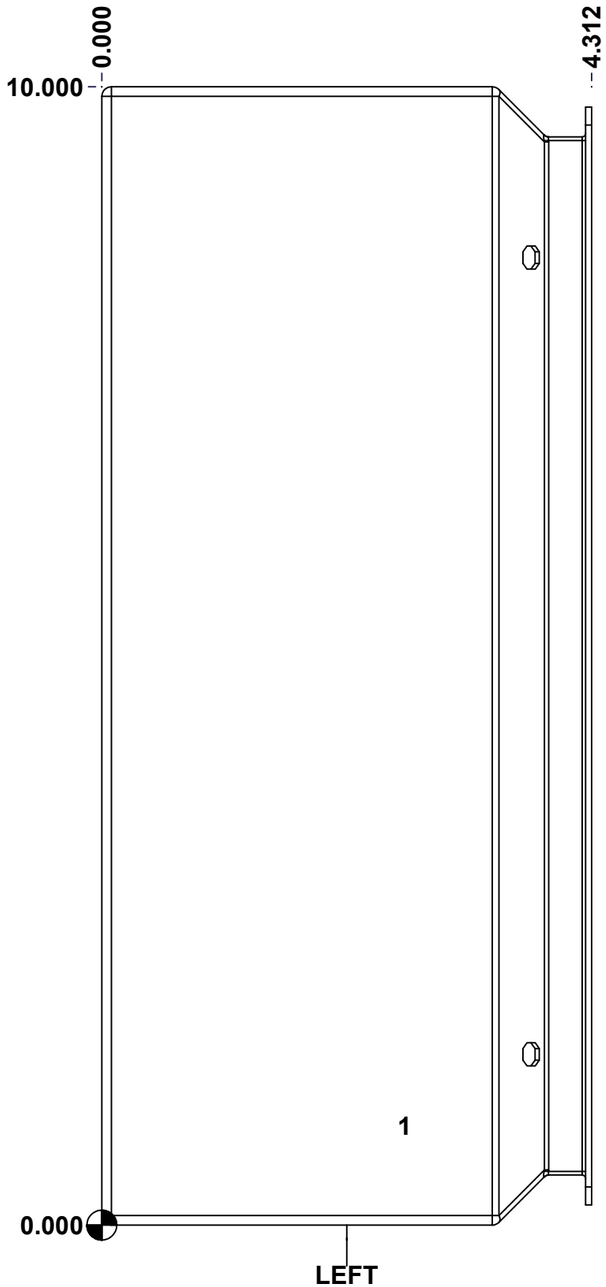

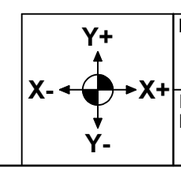

Description	Status
5412ESM 10" x 8" x 4" Body	(NULL)

Part Number / Numéro Pièce	Rev.	
5412ESM100804B	**0**	5 / 7

This drawing is confidential and must not be reproduced or used without the consent of EXM

Ce dessin est confidentiel et ne doit pas être reproduit ou utilisé sans le consentement de EXM

STANDARD FEATURES ARE NOT LISTED IN THIS HOLE TABLE

HOLE TABLE - BACK VIEW (CUSTOM FEATURE ONLY)

CUT-OUT	XDIM	YDIM	DESCRIPTION
1	0.875	0.875	IP STANDOFF M6 x 10mm (Inside)
2	0.875	9.125	IP STANDOFF M6 x 10mm (Inside)
3	7.125	9.125	IP STANDOFF M6 x 10mm (Inside)
4	7.125	0.875	IP STANDOFF M6 x 10mm (Inside)
---	---	---	---
5	1.000	0.000	FOOT 885 ESCHMF1
6	7.000	10.000	FOOT 885 ESCHMF1
7	1.000	10.000	FOOT 885 ESCHMF1
8	7.000	0.000	FOOT 885 ESCHMF1

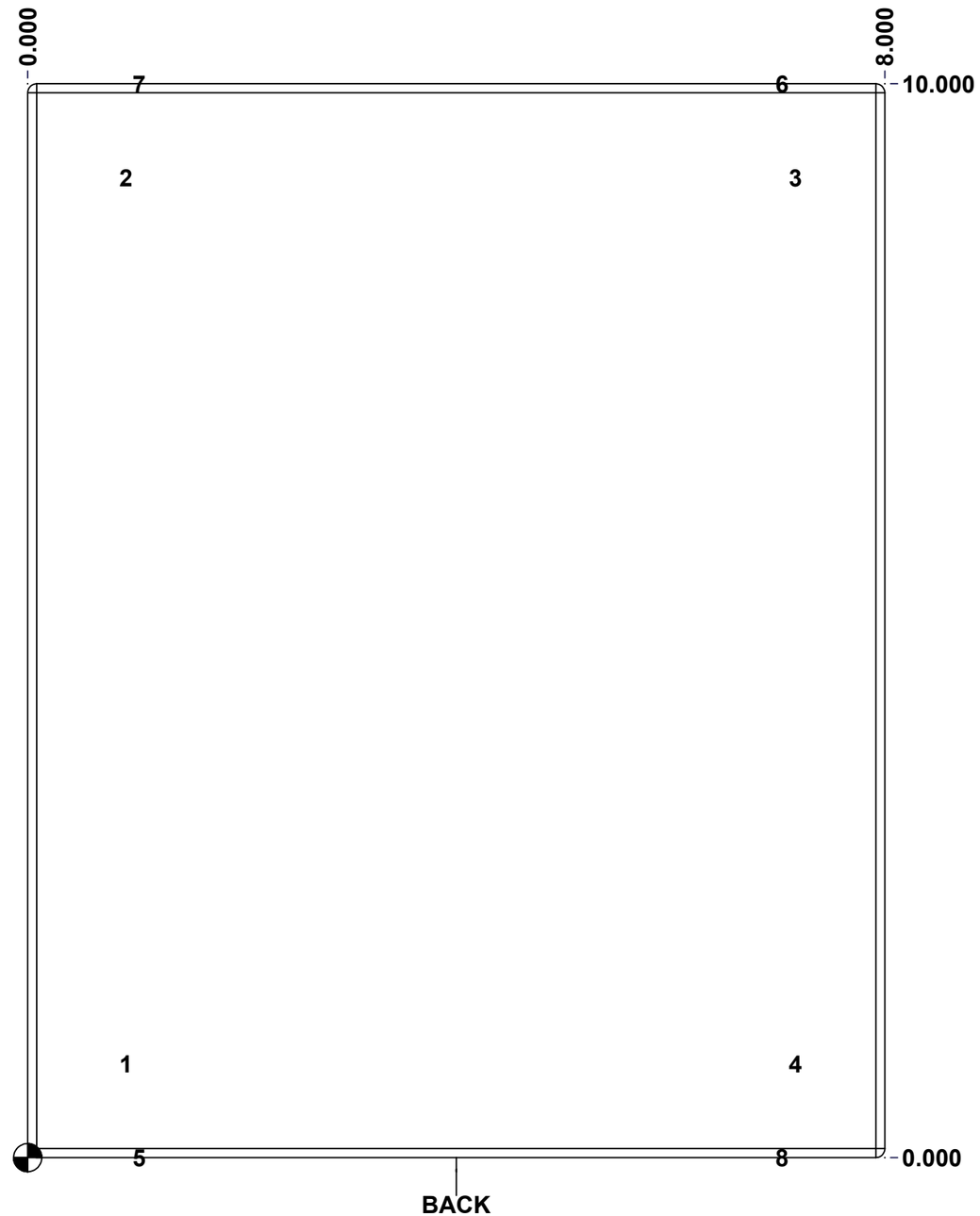

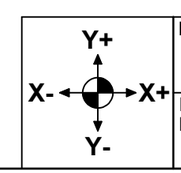

Description	Status
5412ESM 10" x 8" x 4" Body	(NULL)

Part Number / Numéro Pièce	Rev.	
5412ESM100804B	**0**	6 / 7

This drawing is confidential and must not be reproduced or used without the consent of EXM

Ce dessin est confidentiel et ne doit pas être reproduit ou utilisé sans le consentement de EXM

No.	Revisions	Date	By/Par

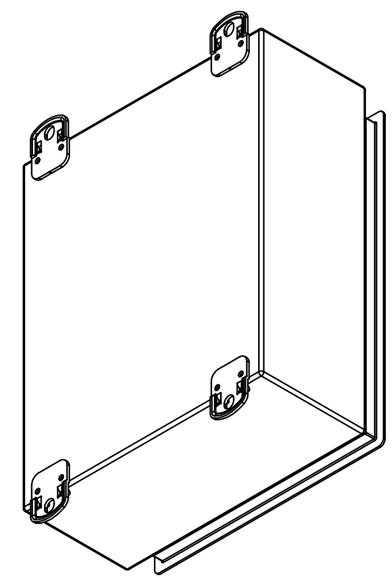

Isometric View

Tél: (450) 979-4373
Fax: (450) 979-4626
www.exmweb.com

Flatness
Aplatissement
Max 3.0mm

Projection

Customer
Client

Date

Drawn By
Dessiné Par
BoxCad: BoxCad

Date 20-Aug-14

Material
Matière
16 Ga Cold Rolled A1008 CS Type B (1.4mm)

Color
Couleur
Asa-61 Grey

Finish
Fini
Smooth

Description
5412ESM 10" x 8" x 4" Body

Detail Rev.

Part Number
Numéro Pièce
5412ESM100804B

Rev.
0

7 / 7

Parts List

Qty	Part Number	Rev	Description
1	STK-Q-00200	0	M5 x 8mm Stainless Steel 316 Carriage Bolt with Nyseal
1	STK-Q-08112	3	M5 Stainless Steel 304 Nylon Insert Dome Nut
1	STK-P-02400S	0	Powder Paint (Asa-61 Grey / Smooth)
1	5412ESM100804B-P	0	5412ESM 10" x 8" x 4" Body Part
4	STK-Q-71305	3	5412 ESMCH Stamped Mounting Foot
5	STK-Q-08350	5	Standoff M6 x 10mm

This drawing is confidential and must not be reproduced or used without the consent of EXM

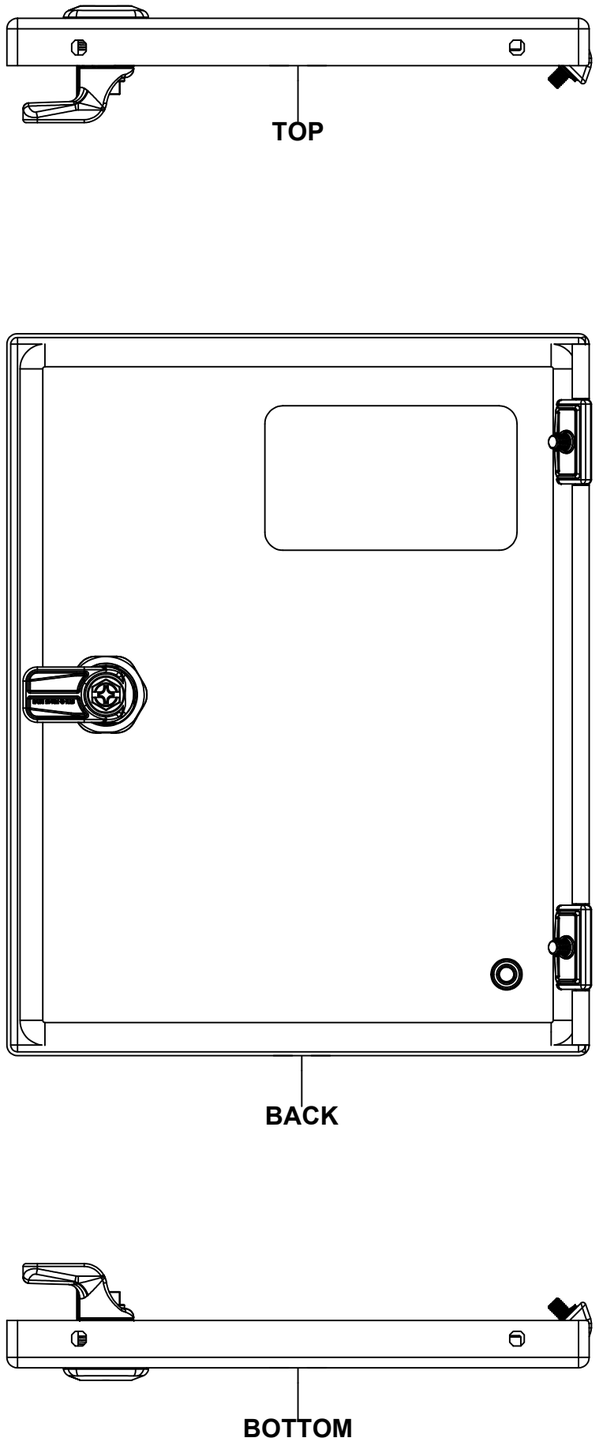

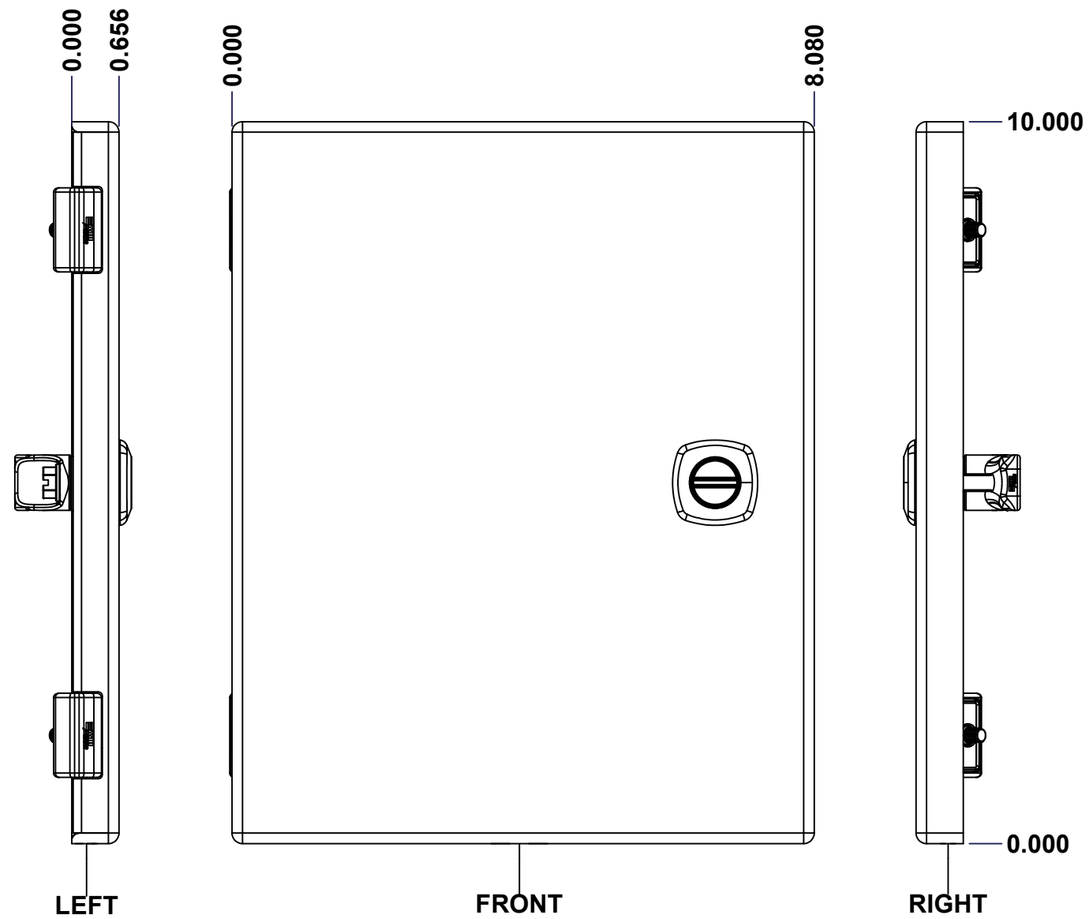

SEE BILL OF MATERIAL ON LAST PAGE

No.	Revisions	Date	By/Par

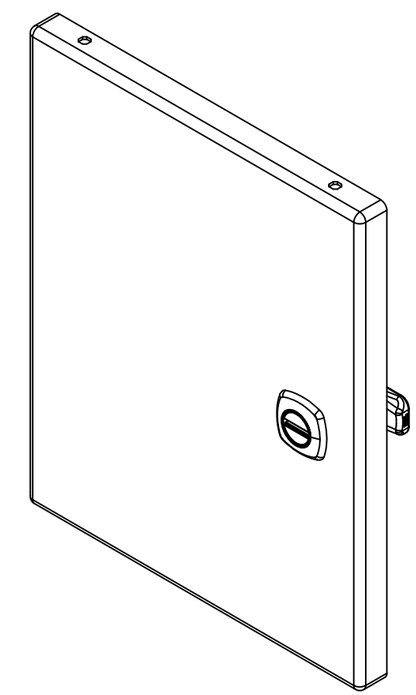

Ce dessin est confidentiel et ne doit pas être reproduit ou utilisé sans le consentement de EXM

Tél: (450) 979-4373
Fax: (450) 979-4626
www.exmweb.com

Flatness / Aplatissement: Max 3.0mm

Projection

Customer / Client		Date	
Drawn By / Dessiné Par	BoxCad: BoxCad	Date	20-Aug-14
Material / Matière	16 Ga Cold Rolled A1008 CS Type B (1.4mm)		
Color / Couleur	Asa-61 Grey	Finish / Fini	Smooth
Description	5412ESM 10" x 8" Cover	Detail Rev.	
Part Number / Numéro Pièce	**5412ESM100804C**	Rev.	**0**

1 / 3

This drawing is confidential and must not be reproduced or used without the consent of EXM

Ce dessin est confidentiel et ne doit pas être reproduit ou utilisé sans le consentement de EXM

STANDARD FEATURES ARE NOT LISTED IN THIS HOLE TABLE

HOLE TABLE - FRONT VIEW (CUSTOM FEATURE ONLY)

CUT-OUT	XDIM	YDIM	DESCRIPTION
1	1.145	1.125	STANDOFF M6 x 10mm (Inside)
2	2.750	8.000	LABEL_EXM
3	6.705	5.000	LOCK 880 SCQ4-SL @ 0.0°

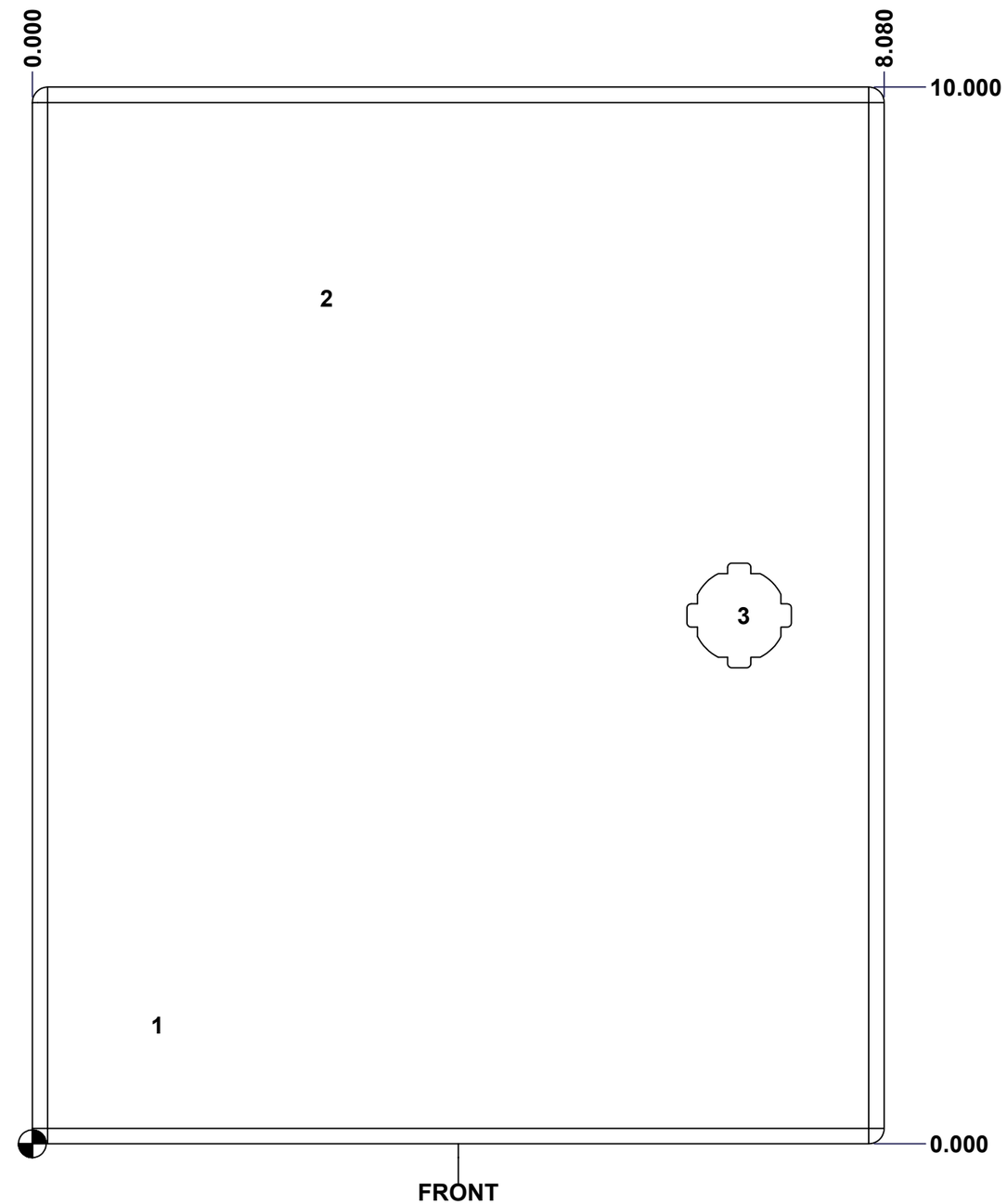

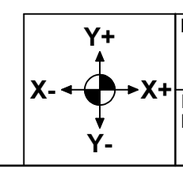

Description	Status
5412ESM 10" x 8" Cover	(NULL)
Part Number / Numéro Pièce: **5412ESM100804C**	Rev. **0**

Tolerance ±1/32" unless otherwise specified

C:\Vault_Workspace\Inventor_Dwg\BoxCad\Result\5412ESM100804\5412ESM100804C.idw

Tolérance ±1/32" sauf spécification contraire

This drawing is confidential and must not be reproduced or used without the consent of EXM

Ce dessin est confidentiel et ne doit pas être reproduit ou utilisé sans le consentement de EXM

No.	Revisions	Date	By/Par

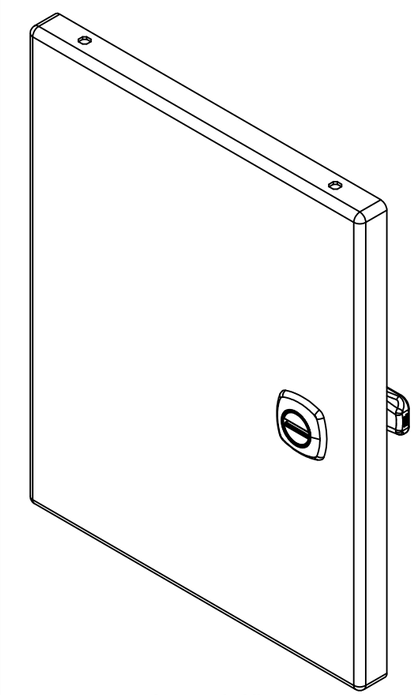

Isometric View

Tél: (450) 979-4373
Fax: (450) 979-4626
www.exmweb.com

Flatness
Aplatissement
Max 3.0mm

Projection

Customer Client		Date	
Drawn By Dessiné Par	BoxCad: BoxCad	Date	20-Aug-14
Material Matière	16 Ga Cold Rolled A1008 CS Type B (1.4mm)		
Color Couleur	Asa-61 Grey	Finish Fini	Smooth
Description	5412ESM 10" x 8" Cover	Detail Rev.	
Part Number Numéro Pièce	**5412ESM100804C**	Rev. **0**	3 / 3

Parts List

Qty	Part Number	Rev	Description
1	880 SCQ4-SL	6	5412 ES 1/4 Turn Lock
1	5412ESM100804G	0	5412ESM 10" x 8" Gasket
1	STK-S-00100	0	3.5" x 2" Silver Milar Flexcon Sticker
1	STK-Q-08350	5	Standoff M6 x 10mm
1	STK-P-02400S	0	Powder Paint (Asa-61 Grey / Smooth)
1	5412ESM100804C-P	0	5412ESM 10" x 8" Cover Part
2	STK-A-33033	4	5412 ESMCH Hinge

This drawing is confidential and must not be reproduced or used without the consent of EXM

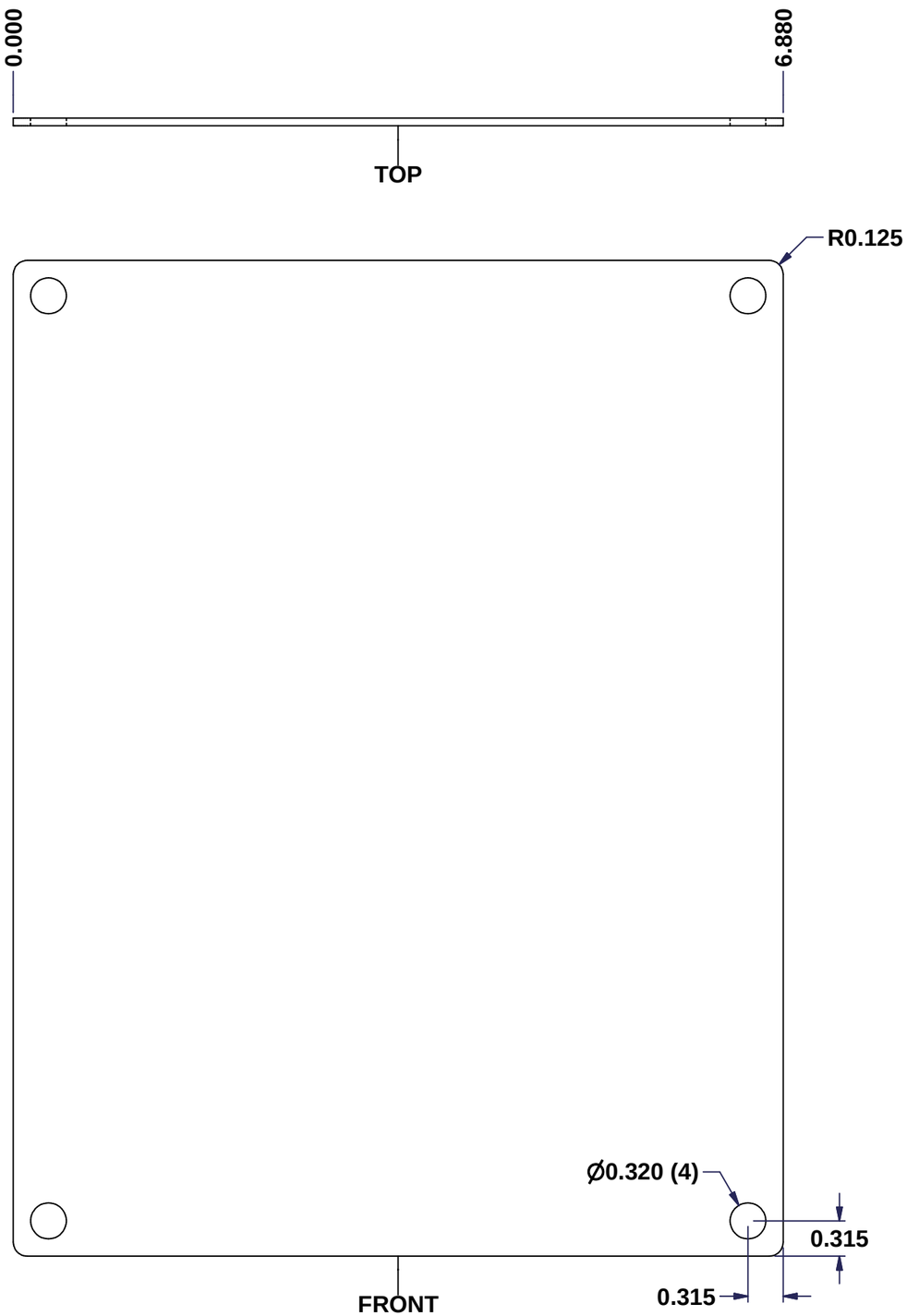

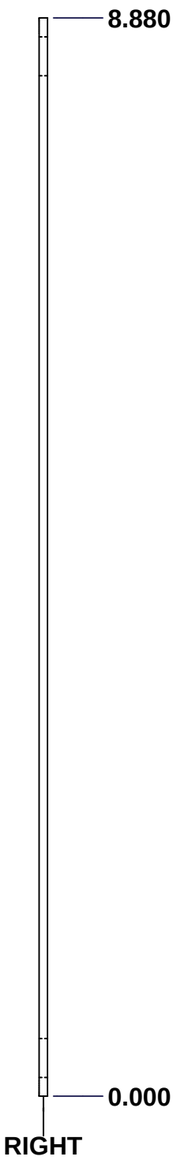

SEE BILL OF MATERIAL ON LAST PAGE

No.	Revisions	Date	By/Par

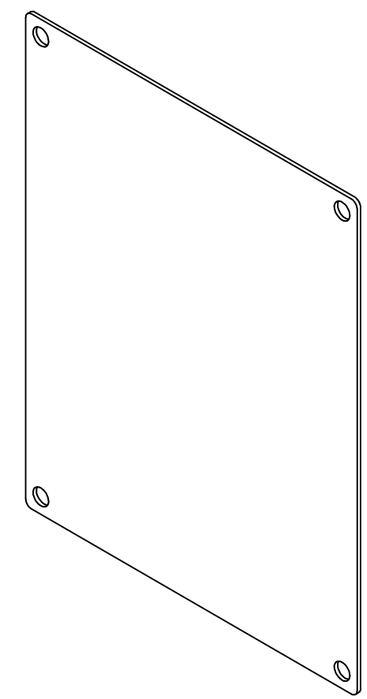

Isometric View

Tél: (450) 979-4373
Fax: (450) 979-4626
www.exmweb.com

Flatness / Aplatissement: Max 3.0mm

Projection

Customer / Client		Date	
Drawn By / Dessiné Par	BoxCad	Date	23-Jan-07
Material / Matière	14 Ga Galvanized (1.7mm)		
Color / Couleur	Unpainted	Finish / Fini	Galvanized
Description	880 SP1008G - Inner Panel	Detail Rev.	
Part Number / Numéro Pièce	880 SP1008G	Rev. 0	1 / 2

Ce dessin est confidentiel et ne doit pas être reproduit ou utilisé sans le consentement de EXM

Tolerance ±1/32" unless otherwise specified

C:\Vault_Workspace\Inventor_Dwg\Inv-8\880SP\880SP1008G.idw

Tolérance ±1/32" sauf spécification contraire

This drawing is confidential and must not be reproduced or used without the consent of EXM

Ce dessin est confidentiel et ne doit pas être reproduit ou utilisé sans le consentement de EXM

No.	Revisions	Date	By/Par

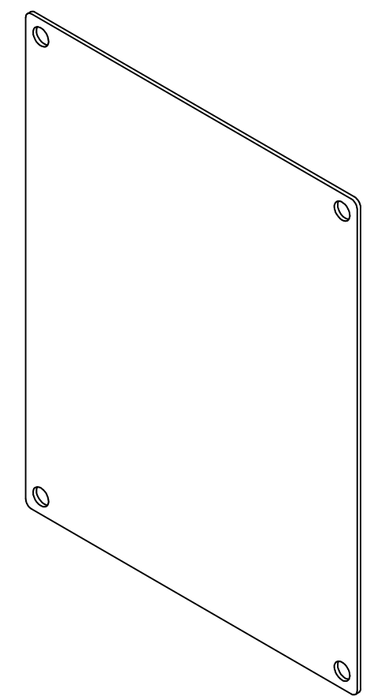

Isometric View

Tél: (450) 979-4373
Fax: (450) 979-4626
www.exmweb.com

Flatness
Aplatissement
Max 3.0mm

Projection

Customer Client		Date	
Drawn By Dessiné Par	BoxCad	Date	23-Jan-07
Material Matière	14 Ga Galvanized (1.7mm)		
Color Couleur	Unpainted	Finish Fini	Galvanized
Description	880 SP1008G - Inner Panel	Detail Rev.	
Part Number Numéro Pièce	**880 SP1008G**	Rev. **0**	2 / 2

Qty	Part Number	Rev	Description
1	880 SP1008G-P	0	880 SP1008G - Inner Panel Part

Parts List