Tolerance ±1/32" unless otherwise specified

C:\Vault_Workspace\Inventor_Dwg\BoxCad\Result\5412ESPH202010\5412ESPH202010.idw

Tolérance ±1/32" sauf spécification contraire

This drawing is confidential and must not be reproduced or used without the consent of EXM

Ce dessin est confidentiel et ne doit pas être reproduit ou utilisé sans le consentement de EXM

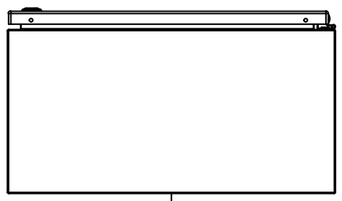

TOP

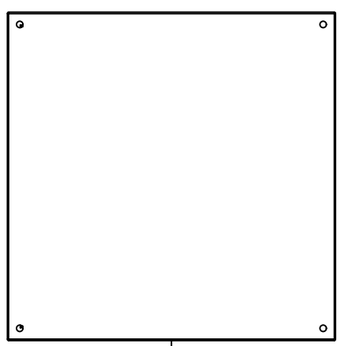

BACK

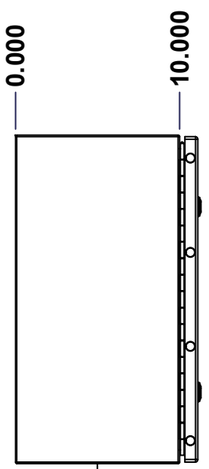

LEFT

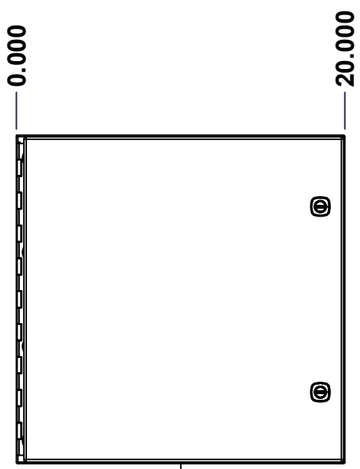

FRONT

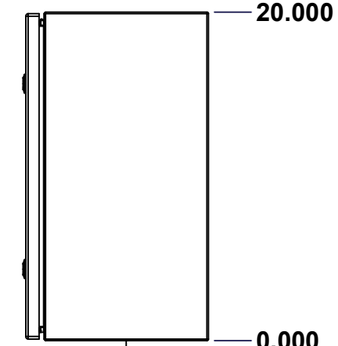

RIGHT

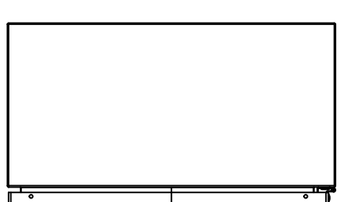

BOTTOM

SEE BILL OF MATERIAL ON LAST PAGE

No.	Revisions	Date	By/Par

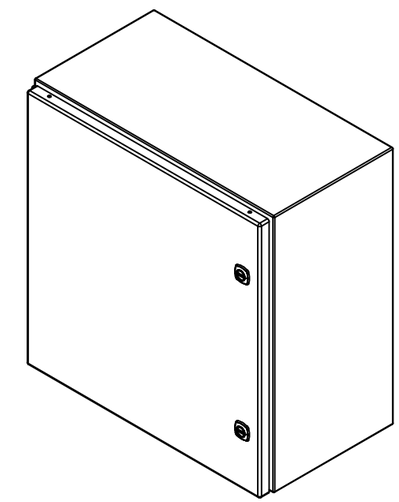

Isometric View

Tél: (450) 979-4373
Fax: (450) 979-4626
www.exmweb.com

Flatness
Aplatissement
Max 3.0mm

Projection

Customer / Client		Date	
Drawn By / Dessiné Par	BoxCad: BoxCad	Date	24-Jul-23
Material / Matière	16 Ga Cold Rolled A1008 CS Type B (1.4mm)		
Color / Couleur	Asa-61 Grey	Finish / Fini	Smooth
Description	5412ESPH 20" x 20" x 10" Assembly	Detail Rev.	
Part Number / Numéro Pièce	5412ESPH202010	Rev.	0

1 / 9

This drawing is confidential and must not be reproduced or used without the consent of EXM

Ce dessin est confidentiel et ne doit pas être reproduit ou utilisé sans le consentement de EXM

NOTE

ITEM	DESCRIPTION
1	NEMA 4/12 Enclosure
2	C/W Standard ground studs on box and cover
3	C/W Standard door stiffener
4	C/W Standard inner panel (Included)
5	C/W Standard inner panel mounting studs

No.	Revisions	Date	By/Par

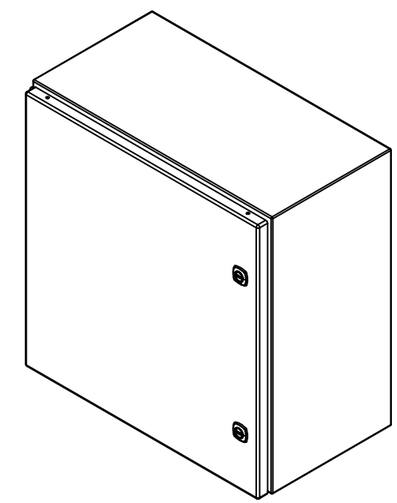

Isometric View

PACKING

ITEM	QTY	DESCRIPTION
Cardboard sleeve	2	Top and Bottom
Cardboard strip	2	Between back of enclosure and inner panel
Plastic bag	1	To protect cover surface and inside gasket
Plastic strip - Black	2	To Squeeze the 2 cardboard sleeve together
Packaging label	1	White label with product number

Parts List

Qty	Part Number	Rev	Description
1	881 SP2020G	0	881 SP - Inner Panel
2	STK-K-01320	0	5412 ES Inner Panel Accessory Kit
1	STK-K-01800	5	5412 ES Accessory Kit
4	STK-Q-04050-14	5	M6 x 14mm Hexagon Socket Head Machine Screw with Nyseal
4	RIVET_NUT_M6_FH_CE	0	Rivet Nut M6 (Low Profile Close End)
1	5412ESPH202010C	0	5412ESPH 20" x 20" Cover
1	5412ESPH202010B	0	5412ESPH 20" x 20" x 10" Body

Tél: (450) 979-4373
Fax: (450) 979-4626
www.exmweb.com

Flatness / Aplatissement: Max 3.0mm

Projection

Customer / Client		Date	
Drawn By / Dessiné Par	BoxCad: BoxCad	Date	24-Jul-23
Material / Matière	16 Ga Cold Rolled A1008 CS Type B (1.4mm)		
Color / Couleur	Asa-61 Grey	Finish / Fini	Smooth
Description	5412ESPH 20" x 20" x 10" Assembly	Detail Rev.	
Part Number / Numéro Pièce	**5412ESPH202010**	Rev.	**0**

This drawing is confidential and must not be reproduced or used without the consent of EXM

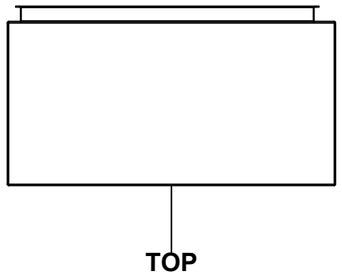

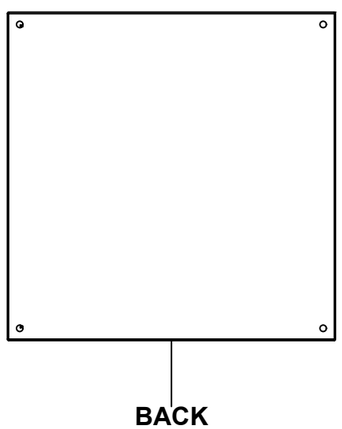

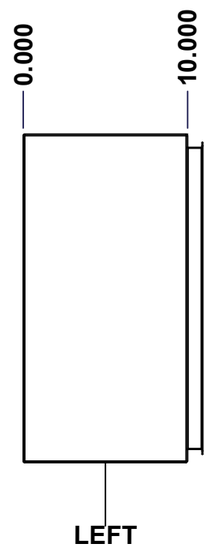

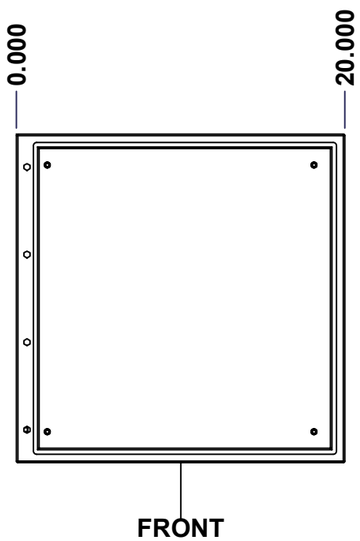

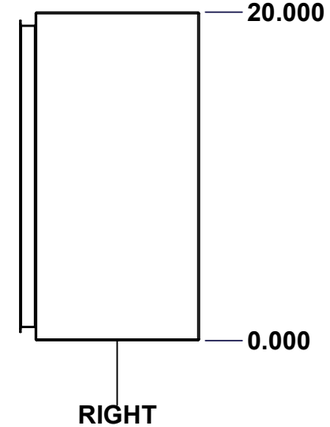

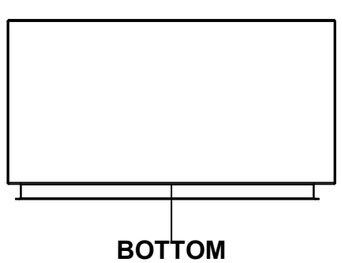

SEE BILL OF MATERIAL ON LAST PAGE

No.	Revisions	Date	By/Par

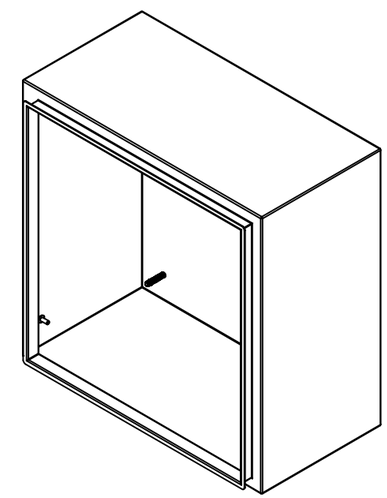

Isometric View

Ce dessin est confidentiel et ne doit pas être reproduit ou utilisé sans le consentement de EXM

Tél: (450) 979-4373
Fax: (450) 979-4626
www.exmweb.com

Flatness / Aplatissement: Max 3.0mm

Projection

Customer / Client		Date	
Drawn By / Dessiné Par	BoxCad: BoxCad	Date	24-Jul-23
Material / Matière	16 Ga Cold Rolled A1008 CS Type B (1.4mm)		
Color / Couleur	Asa-61 Grey	Finish / Fini	Smooth
Description	5412ESPH 20" x 20" x 10" Body	Detail Rev.	
Part Number / Numéro Pièce	**5412ESPH202010B**	Rev.	**0**

This drawing is confidential and must not be reproduced or used without the consent of EXM

Ce dessin est confidentiel et ne doit pas être reproduit ou utilisé sans le consentement de EXM

STANDARD FEATURES ARE NOT LISTED IN THIS HOLE TABLE

HOLE TABLE - LEFT VIEW (CUSTOM FEATURE ONLY)

CUT-OUT	XDIM	YDIM	DESCRIPTION
1	8.500	2.000	GND STUD M6 x 16mm (Inside)

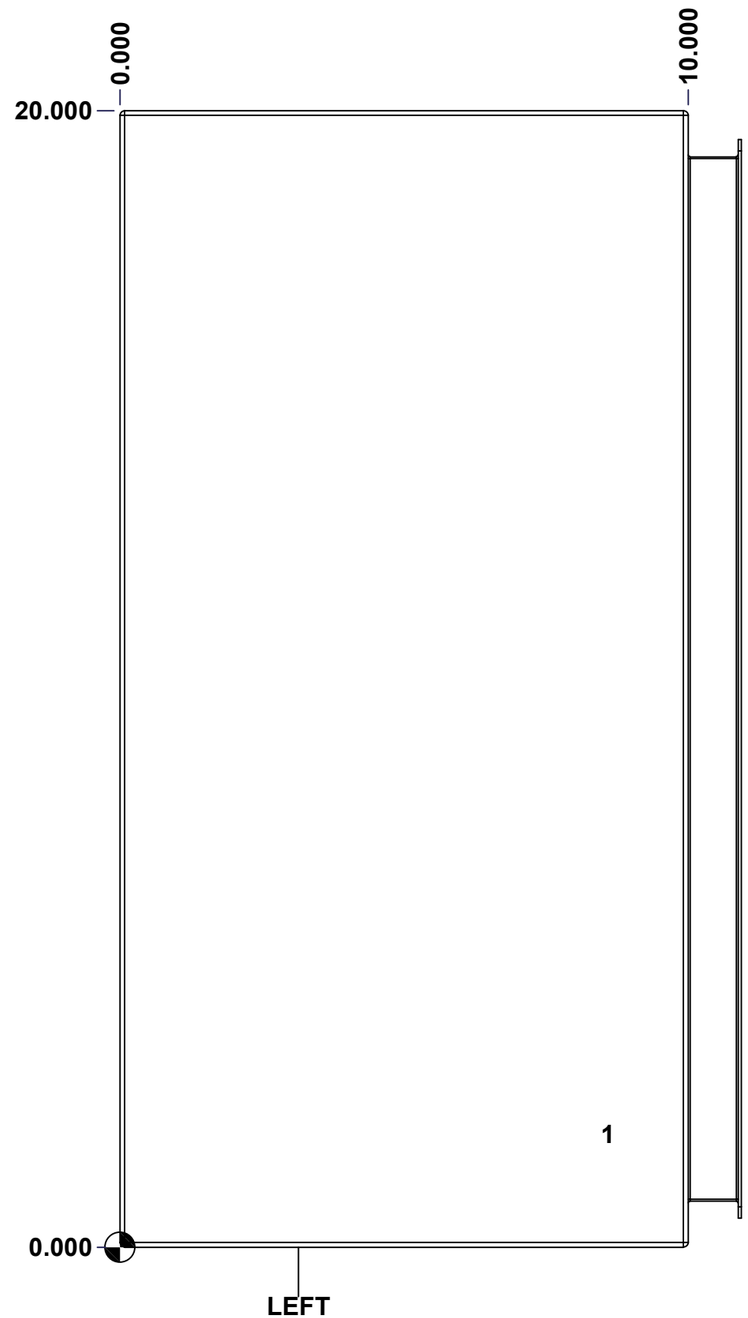

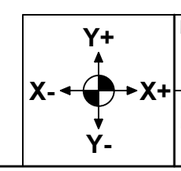

Description	Status
5412ESPH 20" x 20" x 10" Body	(NULL)

Part Number / Numéro Pièce	Rev.	
5412ESPH202010B	**0**	4 / 9

This drawing is confidential and must not be reproduced or used without the consent of EXM

Ce dessin est confidentiel et ne doit pas être reproduit ou utilisé sans le consentement de EXM

STANDARD FEATURES ARE NOT LISTED IN THIS HOLE TABLE

HOLE TABLE - BACK VIEW (CUSTOM FEATURE ONLY)

CUT-OUT	XDIM	YDIM	DESCRIPTION
1	1.875	1.875	IP STUD M8 x 35mm (Inside)
2	1.875	18.125	IP STUD M8 x 35mm (Inside)
3	18.125	18.125	IP STUD M8 x 35mm (Inside)
4	18.125	1.875	IP STUD M8 x 35mm (Inside)
---	---	---	---
5	19.250	0.750	RND Ø0.390
6	19.250	19.250	RND Ø0.390
7	0.750	19.250	RND Ø0.390
8	0.750	0.750	RND Ø0.390

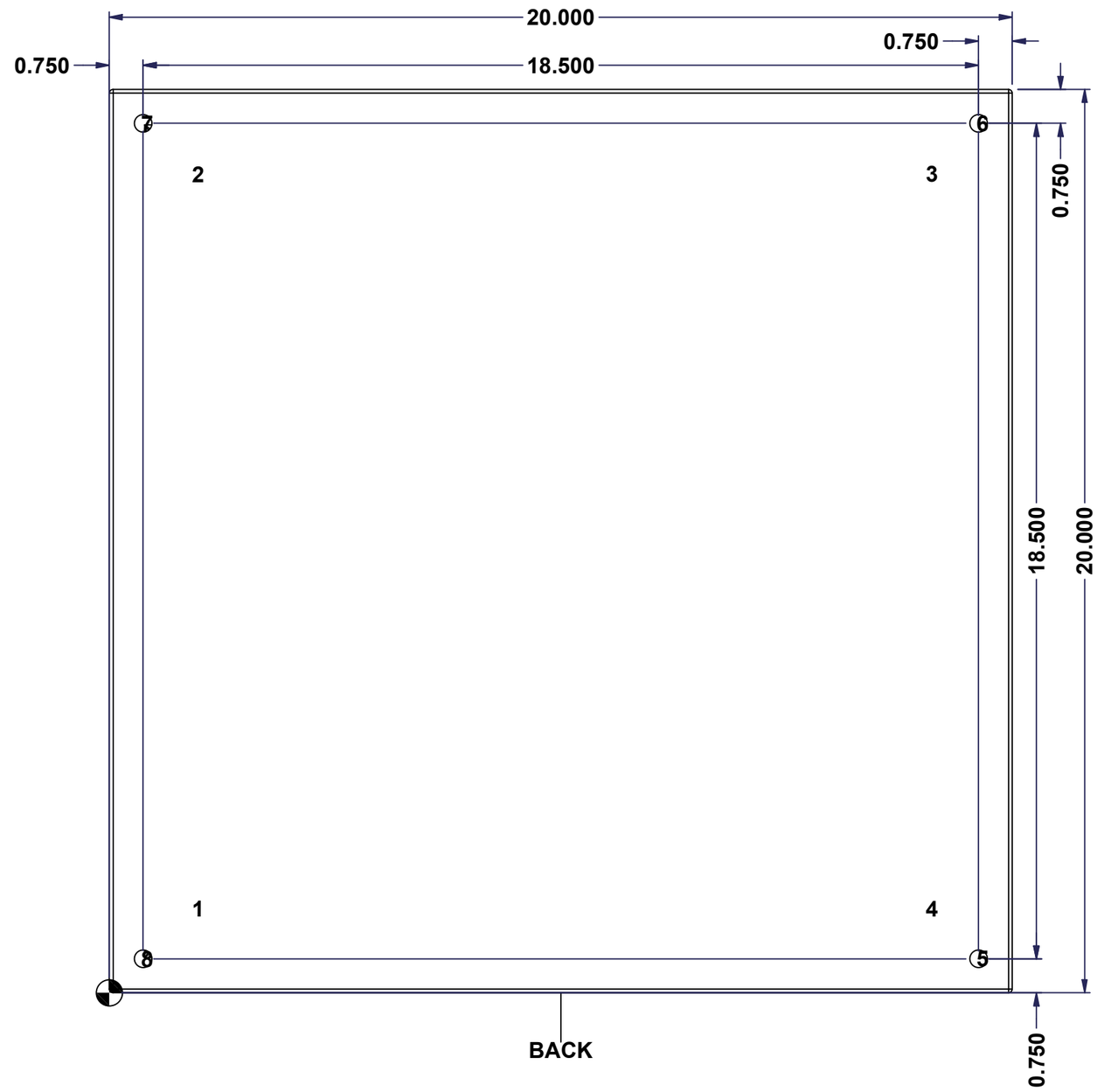

Y+
X- X+
Y-

Description	Status
5412ESPH 20" x 20" x 10" Body	(NULL)
Part Number / Numéro Pièce: **5412ESPH202010B**	Rev. **0**

This drawing is confidential and must not be reproduced or used without the consent of EXM
Ce dessin est confidentiel et ne doit pas être reproduit ou utilisé sans le consentement de EXM

No.	Revisions	Date	By/Par

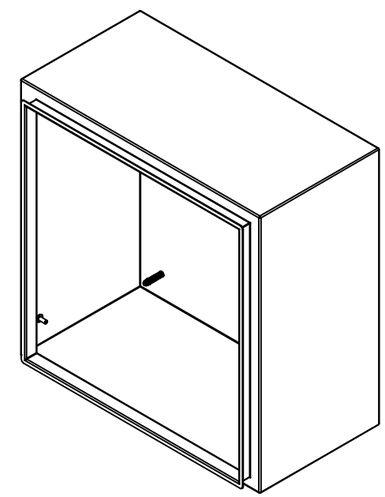

Isometric View

Qty	Part Number	Rev	Description
1	STK-Q-16080	0	Ground Stud M6 x 16mm Steel
1	STK-P-02400S	0	Powder Paint (Asa-61 Grey / Smooth)
4	STK-Q-16005	1	Stud M8 x 35 (No Paint Cap Required)
1	5412ESPH202010B-P	0	5412ESPH 20" x 20" x 10" Body Part

Parts List

Tél: (450) 979-4373
Fax: (450) 979-4626
www.exmweb.com

Flatness / Aplatissement: Max 3.0mm

Projection

Customer / Client:

Date:

Drawn By / Dessiné Par: BoxCad: BoxCad

Date: 24-Jul-23

Material / Matière: 16 Ga Cold Rolled A1008 CS Type B (1.4mm)

Color / Couleur: Asa-61 Grey

Finish / Fini: Smooth

Description: 5412ESPH 20" x 20" x 10" Body

Detail Rev.:

Part Number / Numéro Pièce: **5412ESPH202010B**

Rev.: **0**

This drawing is confidential and must not be reproduced or used without the consent of EXM

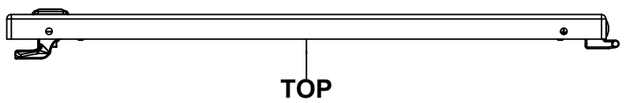

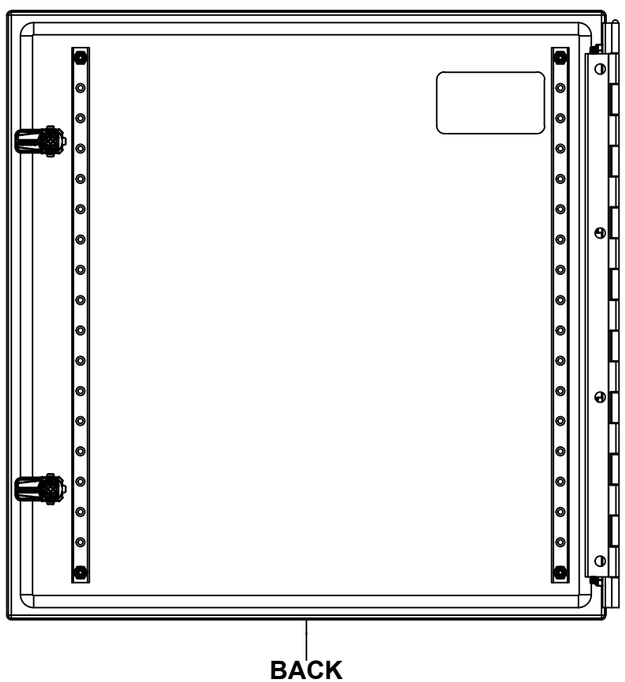

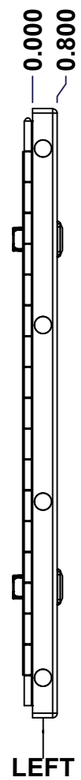

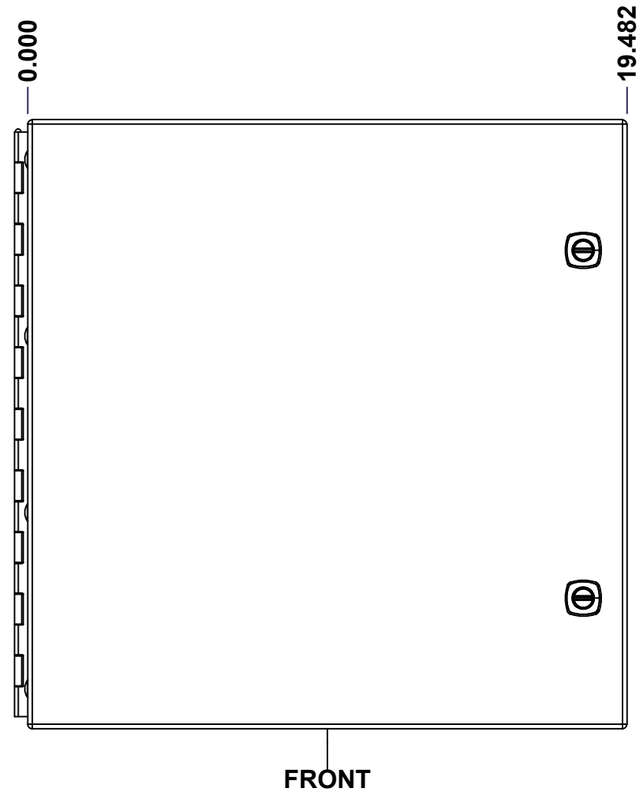

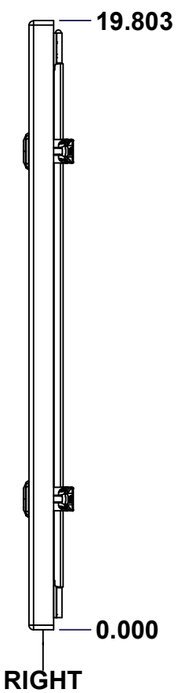

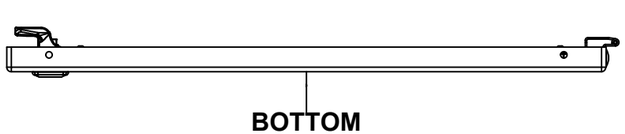

SEE BILL OF MATERIAL ON LAST PAGE

No.	Revisions	Date	By/Par

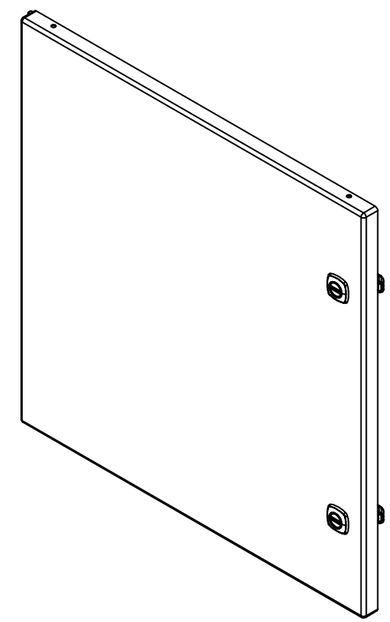

Isometric View

Ce dessin est confidentiel et ne doit pas être reproduit ou utilisé sans le consentement de EXM

exm
Tél: (450) 979-4373
Fax: (450) 979-4626
www.exmweb.com

Flatness / Aplatissement: Max 3.0mm

Projection

Customer / Client		Date	
Drawn By / Dessiné Par	BoxCad: BoxCad	Date	24-Jul-23
Material / Matière	16 Ga Cold Rolled A1008 CS Type B (1.4mm)		
Color / Couleur	Asa-61 Grey	Finish / Fini	Smooth
Description	5412ESPH 20" x 20" Cover	Detail Rev.	
Part Number / Numéro Pièce	**5412ESPH202010C**	Rev.	**0**

This drawing is confidential and must not be reproduced or used without the consent of EXM

Ce dessin est confidentiel et ne doit pas être reproduit ou utilisé sans le consentement de EXM

STANDARD FEATURES ARE NOT LISTED IN THIS HOLE TABLE

HOLE TABLE - FRONT VIEW (CUSTOM FEATURE ONLY)

CUT-OUT	XDIM	YDIM	DESCRIPTION
1	1.486	1.535	STUD M6 x 18mm (Inside)
2	1.486	18.268	STUD M6 x 18mm (Inside)
3	17.081	18.268	STUD M6 x 18mm (Inside)
4	17.081	1.535	STUD M6 x 18mm (Inside)
---	---	---	---
5	3.750	16.803	LABEL_EXM (Inside)
6	18.058	15.553	880 SCQ4-SL
7	18.058	4.250	880 SCQ4-SL

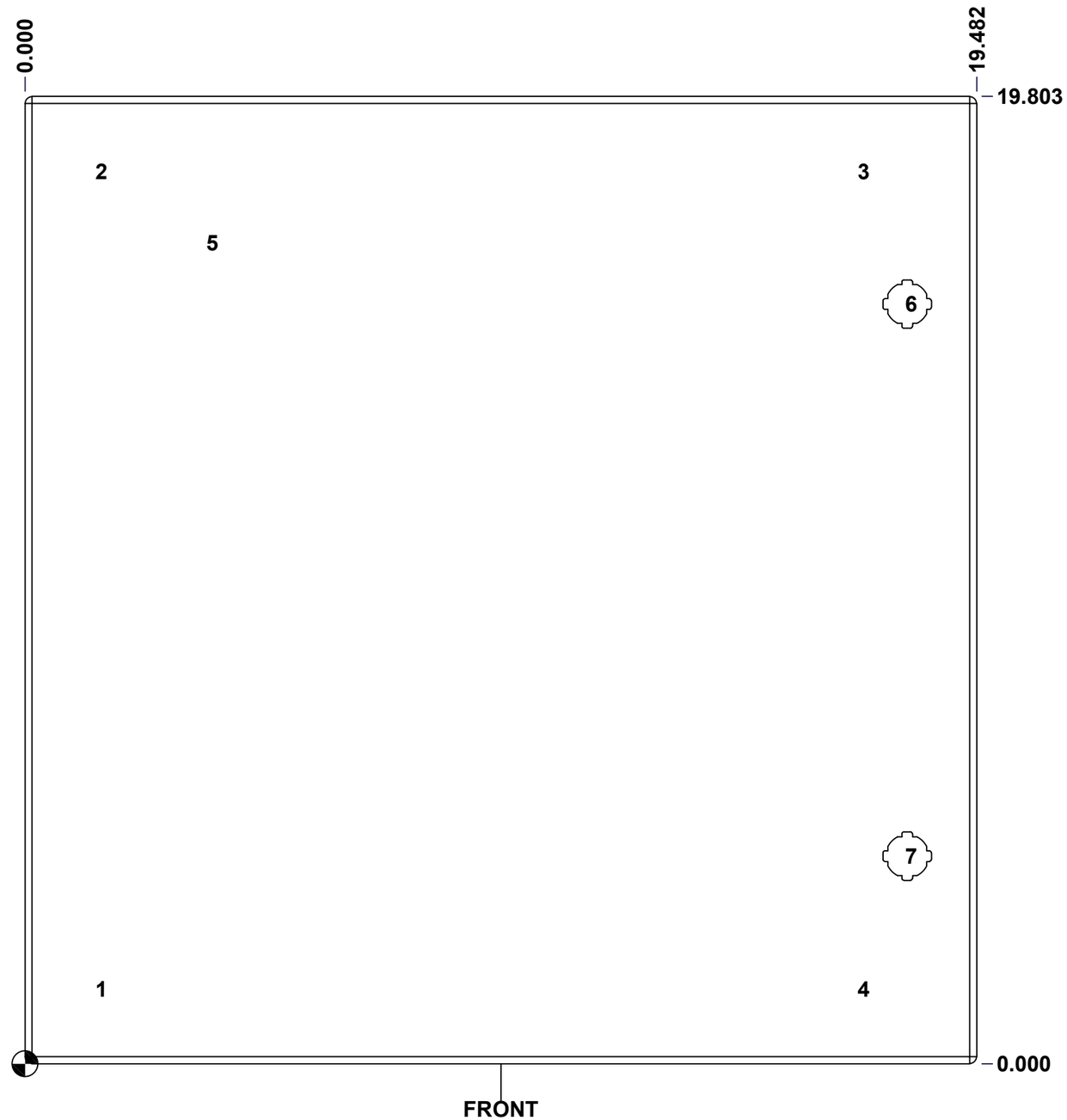

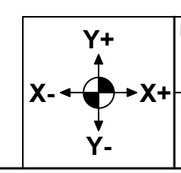

Description	Status
5412ESPH 20" x 20" Cover	(NULL)
Part Number / Numéro Pièce: **5412ESPH202010C**	Rev. **0**

Tolerance ±1/32" unless otherwise specified

C:\Vault_Workspace\Inventor_Dwg\BoxCad\Result\5412ESPH202010\5412ESPH202010.idw

Tolérance ±1/32" sauf spécification contraire

This drawing is confidential and must not be reproduced or used without the consent of EXM

Ce dessin est confidentiel et ne doit pas être reproduit ou utilisé sans le consentement de EXM

No.	Revisions	Date	By/Par

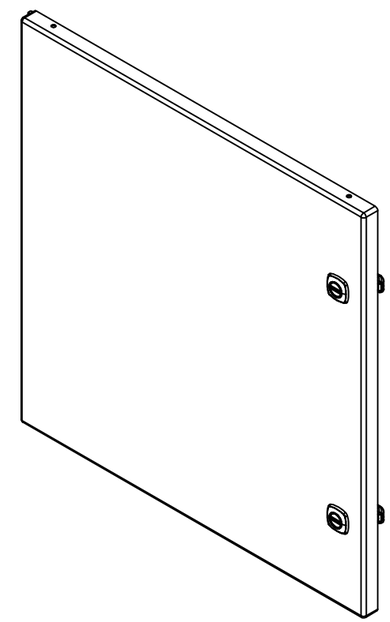

Isometric View

QTY	Part Number	Rev	Description
1	STK-S-00100	0	3.5" x 2" Silver Milar Flexcon Sticker
1	STK-P-02400S	0	Powder Paint (Asa-61 Grey / Smooth)
2	STK-Q-46020-20	5	5412 ES Vertical Door Stiffener 20"
4	STK-Q-16055	1	M6 x 18mm Stud (No Paint Cap Required)
4	STK-Q-07225	0	M6 Stainless Steel Nylon Insert Lock Nut
4	STK-Q-00260	1	M6 x 13mm Carriage Bolt
1	5412ESPH202010HP-P	0	Piano Hinge Pin (Length= 19.184")
1	5412ESPH202010H1-P	0	5412ESPH 20" x 20" Piano Hinge Part
1	5412ESPH202010H2-P	0	5412ESPH 20" x 20" Piano Hinge Part
1	5412ESPH202010G	0	5412ESPH 20" x 20" Cover Gasket Part
1	5412ESPH202010C-P	0	5412ESPH 20" x 20" Cover Part
2	STK-K-12500	16	5412 ES 1/4 Turn Lock
4	STK-Q-07220	1	M6 Nylon Insert Lock Nut

Parts List

Tél: (450) 979-4373
Fax: (450) 979-4626
www.exmweb.com

Flatness / Aplatissement: Max 3.0mm

Projection

Customer / Client

Date

Drawn By / Dessiné Par: BoxCad: BoxCad

Date: 24-Jul-23

Material / Matière: 16 Ga Cold Rolled A1008 CS Type B (1.4mm)

Color / Couleur: Asa-61 Grey

Finish / Fini: Smooth

Description: 5412ESPH 20" x 20" Cover

Detail Rev.

Part Number / Numéro Pièce: **5412ESPH202010C**

Rev.: **0**

9 / 9

This drawing is confidential and must not be reproduced or used without the consent of EXM

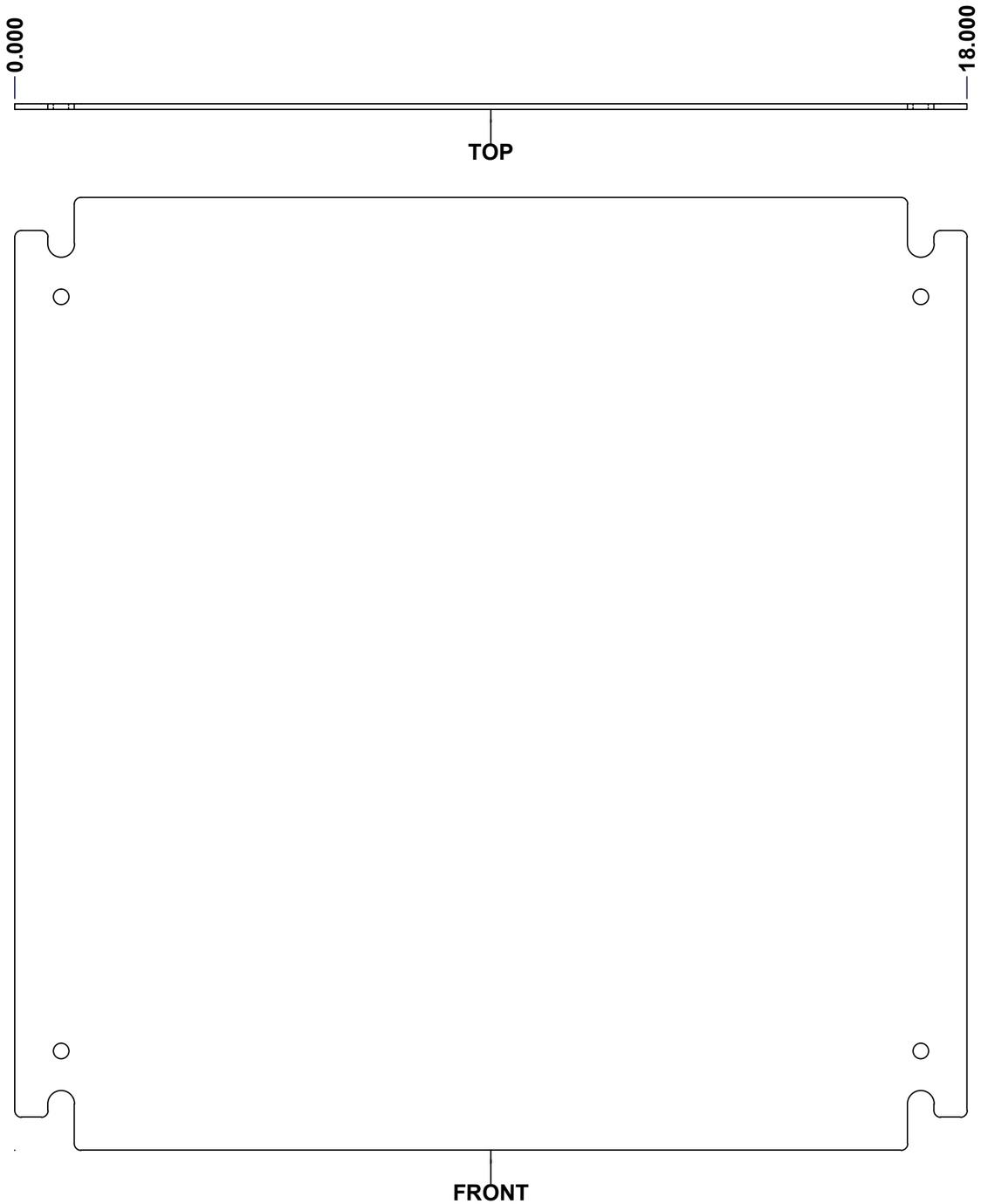

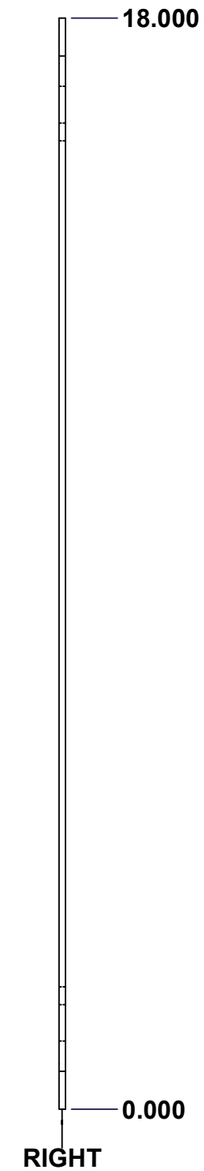

No.	Revisions	Date	By/Par

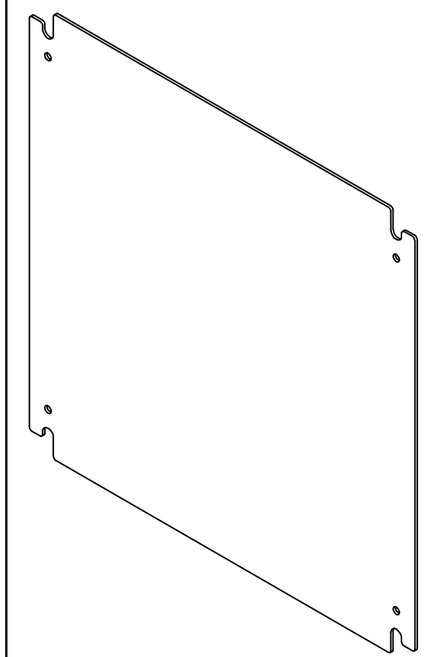

Isometric View

Ce dessin est confidentiel et ne doit pas être reproduit ou utilisé sans le consentement de EXM

Tél: (450) 979-4373
Fax: (450) 979-4626
www.exmweb.com

Flatness
Aplatissement
Max 3.0mm

Projection

Customer
Client

Date

Drawn By
Dessiné Par: BoxCad

Date: 23-Jan-07

Material
Matière: See Part List

Color
Couleur: See Part List

Finish
Fini: See Part List

Description
881 SP - Inner Panel

Detail Rev.

Part Number
Numéro Pièce
881 SP2020G

Rev.
0

1 / 2

Qty	Part Number	Rev	Description	Material	Color	Finish
1	881 SP2020G-P	0	881 SP - Inner Panel Part	12 Ga Galvanized	Unpainted	Galvanized

Parts List

Tolerance ±1/32" unless otherwise specified

C:\Vault_Workspace\Inventor_Dwg\Inv-8\881SP\881SP2020G.idw

Tolérance ±1/32" sauf spécification contraire

This drawing is confidential and must not be reproduced or used without the consent of EXM

Ce dessin est confidentiel et ne doit pas être reproduit ou utilisé sans le consentement de EXM

Table 1

CUT-OUT	XDIM	YDIM	DESCRIPTION
1	0.875	1.875	GROUND HOLE (RND ∅0.290)
2	17.125	1.875	GROUND HOLE (RND ∅0.290)
3	0.875	16.125	GROUND HOLE (RND ∅0.290)
4	17.125	16.125	GROUND HOLE (RND ∅0.290)

FRONT VIEW

All knockouts are actual size / Les disques défonçables sont grandeur réel

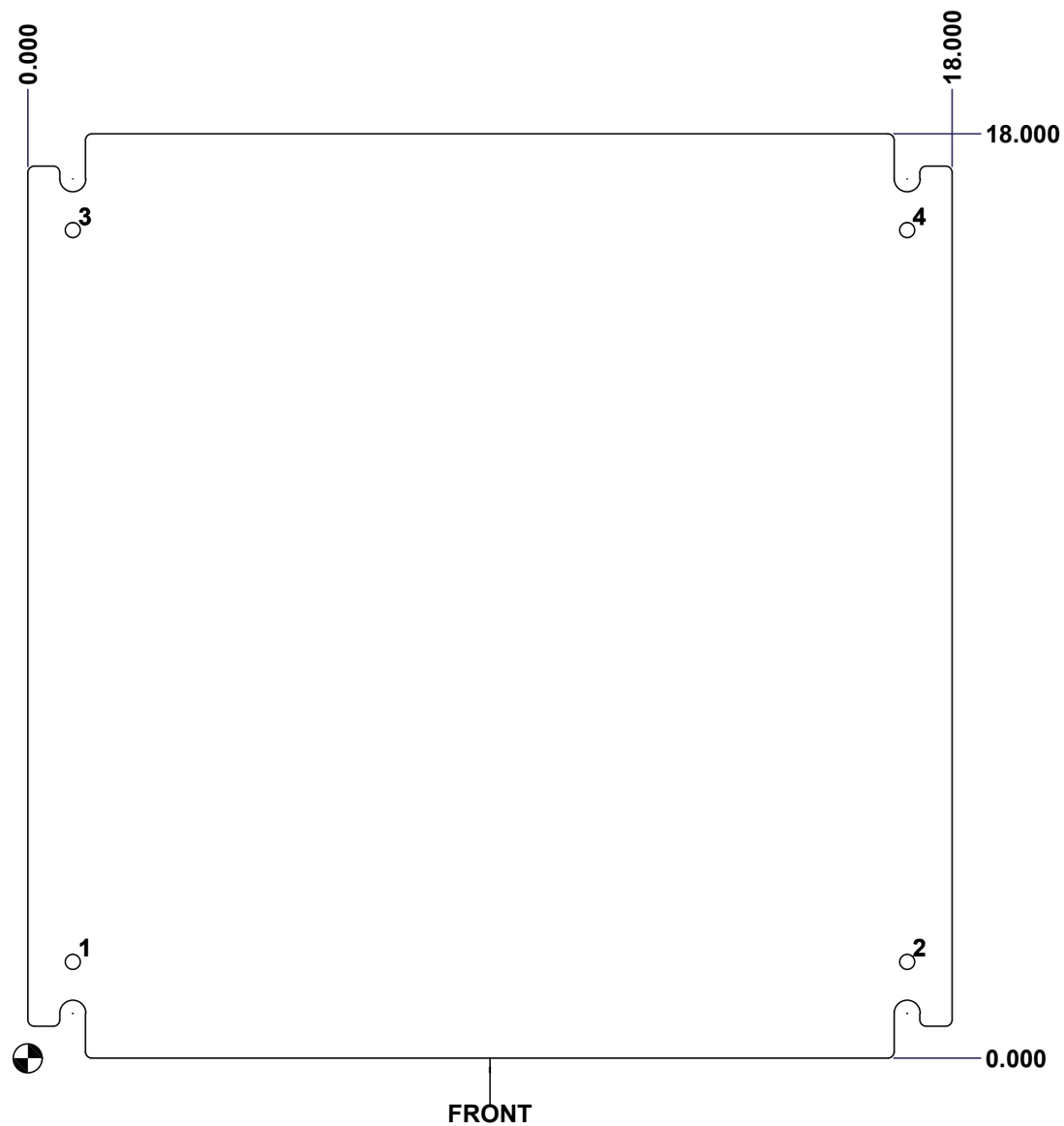

No.	Revisions	Date	By/Par

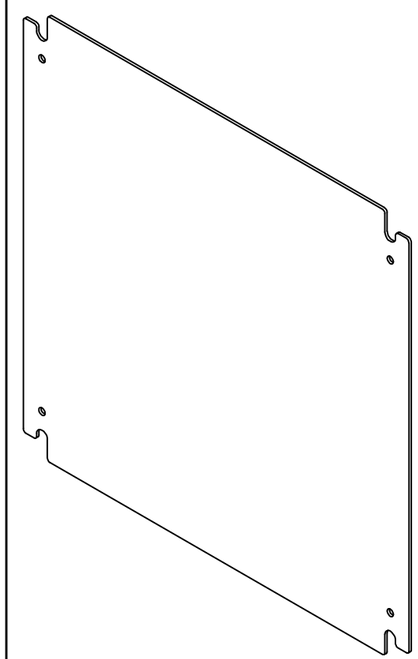

Isometric View

Tél: (450) 979-4373
Fax: (450) 979-4626
www.exmweb.com

Flatness / Aplatissement: Max 3.0mm

Projection

Customer / Client	Date
Drawn By / Dessiné Par: BoxCad	Date: 23-Jan-07
Material / Matière: See Part List	
Color / Couleur: See Part List	Finish / Fini: See Part List
Description: 881 SP - Inner Panel	Detail Rev.
Part Number / Numéro Pièce: **881 SP2020G**	Rev. **0** — 2 / 2