This drawing is confidential and must not be reproduced or used without the consent of EXM

Ce dessin est confidentiel et ne doit pas être reproduit ou utilisé sans le consentement de EXM

No.	Revisions	Date	By/Par

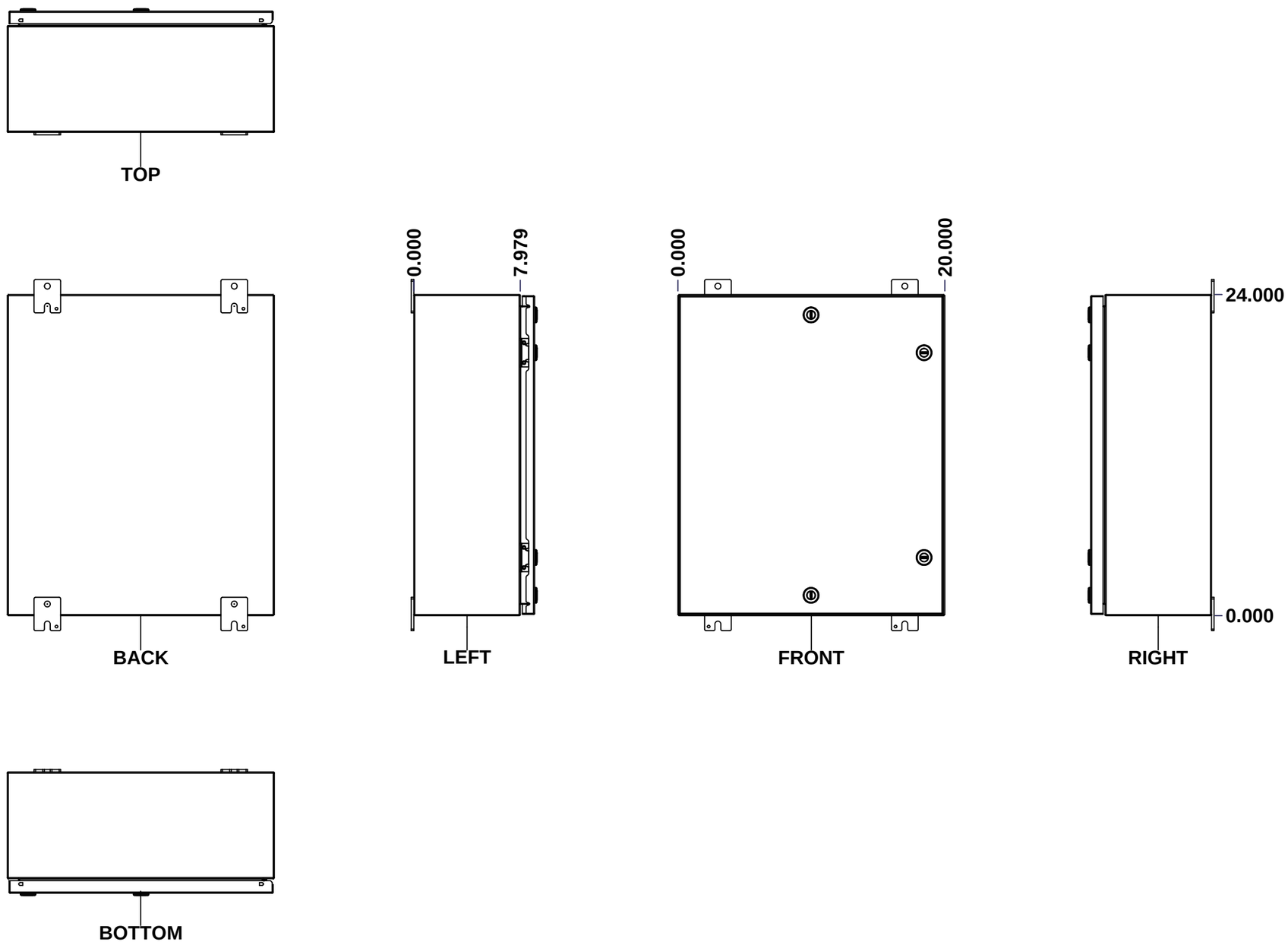

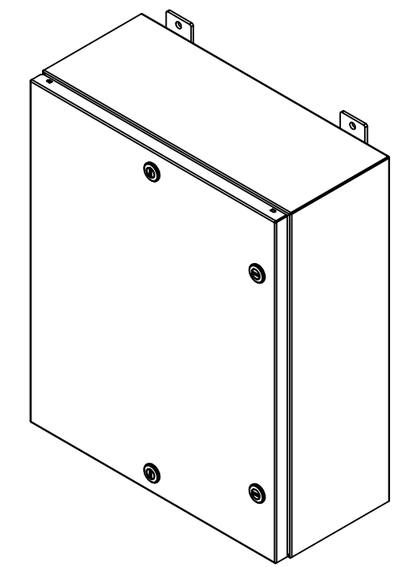

Isometric View

Tél: (450) 979-4373
Fax: (450) 979-4626
www.exmweb.com

Flatness
Aplatissement
Max 3.0mm

Projection

Customer Client		Date	
Drawn By Dessiné Par	BoxCad: Annie	Date	29/04/2014
Material Matière	16 Ga H.R.P. & O. (1.4mm)		
Color Couleur	Asa-61 Grey	Finish Fini	Smooth
Description 5412ESPR 24" x 20" x 8" Assembly		Detail Rev.	
Part Number Numéro Pièce **5412ESPR242008**		Rev. **0**	1 / 2

SEE BILL OF MATERIAL ON LAST PAGE

Tolerance ±1/32" unless otherwise specified

C:\Vault_Workspace\Inventor_Dwg\BoxCad\Result\5412ESPR242008\5412ESPR242008.idw

Tolérance ±1/32" sauf spécification contraire

This drawing is confidential and must not be reproduced or used without the consent of EXM

Ce dessin est confidentiel et ne doit pas être reproduit ou utilisé sans le consentement de EXM

NOTE

ITEM	DESCRIPTION
1	NEMA 4/12 Enclosure
2	C/W Standard ground studs on box and cover
3	W/O Standard door stiffener
4	C/W Standard inner panel (Sold seperately)
5	C/W Standard inner panel mounting studs

No.	Revisions	Date	By/Par

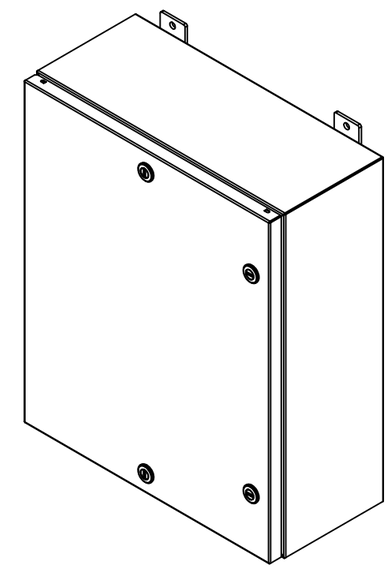

Isometric View

Qty	Part Number	Rev	Description
1	880 PP	0	Self Adhesive Print Pocket
1	STK-K-01800	0	5412 ES Accessory Kit
4	STK-Q-03000	0	M5 x 8mm Phillips Flat Head Screw
1	881 SP2420	0	881 SP - Inner Panel
1	5412ESPR242008C	0	5412ESPR 24" x 20" Cover
4	STK-Q-07310	2	Flange Lock Nut M8
4	STK-Q-07610	7	M8 Plastic Spacer 22.2mm
1	5412ESPR242008B	0	5412ESPR 24" x 20" x 8" Body

Parts List

Tél: (450) 979-4373
Fax: (450) 979-4626
www.exmweb.com

Flatness / Aplatissement: Max 3.0mm

Projection

Customer / Client

Date

Drawn By / Dessiné Par: BoxCad: Annie

Date: 29/04/2014

Material / Matière: 16 Ga H.R.P. & O. (1.4mm)

Color / Couleur: Asa-61 Grey

Finish / Fini: Smooth

Description: 5412ESPR 24" x 20" x 8" Assembly

Detail Rev.

Part Number / Numéro Pièce: **5412ESPR242008**

Rev. **0**

2 / 2

This drawing is confidential and must not be reproduced or used without the consent of EXM

Ce dessin est confidentiel et ne doit pas être reproduit ou utilisé sans le consentement de EXM

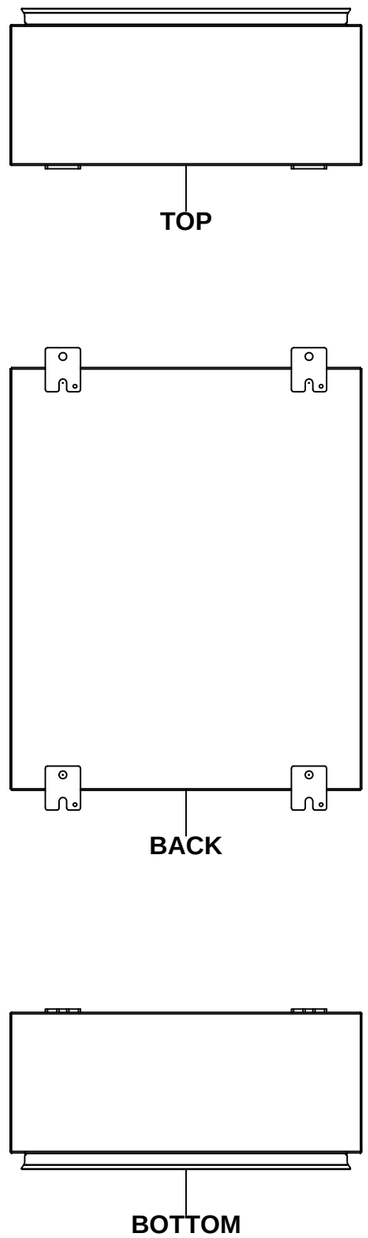

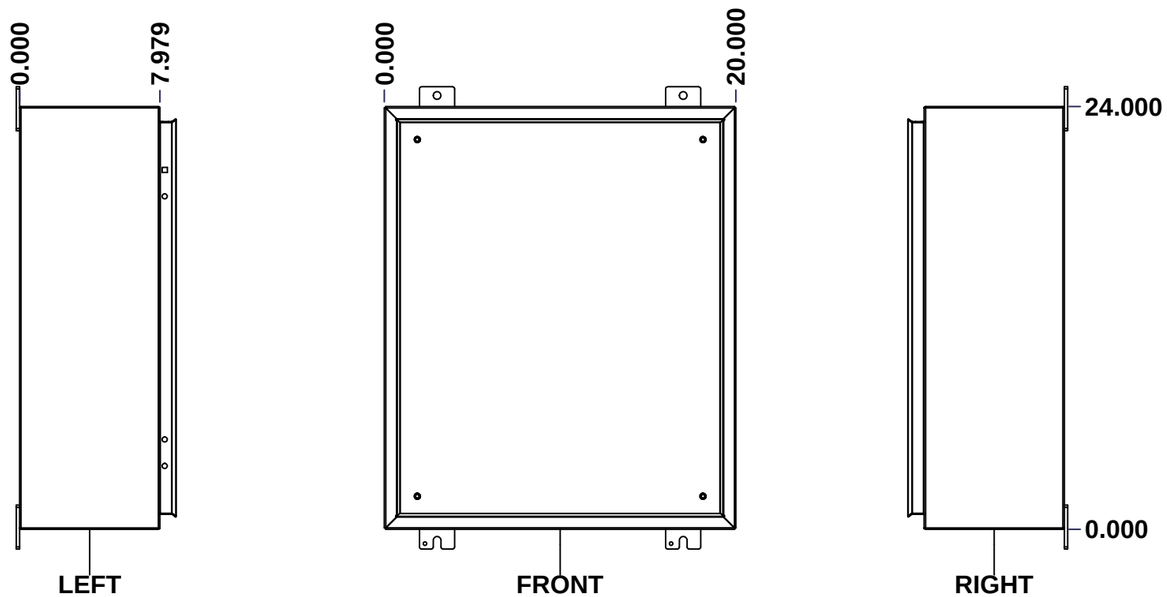

SEE BILL OF MATERIAL ON LAST PAGE

No.	Revisions	Date	By/Par

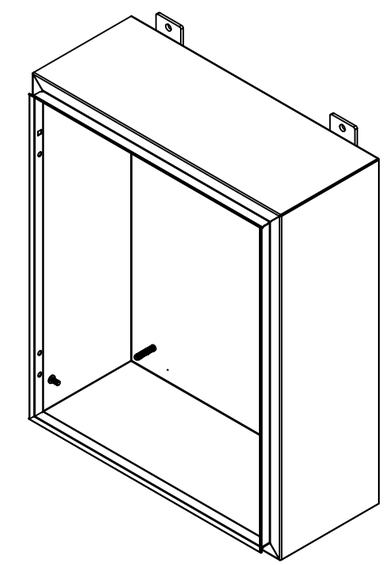

Isometric View

Tél: (450) 979-4373
Fax: (450) 979-4626
www.exmweb.com

Flatness / Aplatissement: Max 3.0mm

Projection

Customer / Client		Date	
Drawn By / Dessiné Par	BoxCad: Annie	Date	29/04/2014
Material / Matière	16 Ga H.R.P. & O. (1.4mm)		
Color / Couleur	Asa-61 Grey	Finish / Fini	Smooth
Description	5412ESPR 24" x 20" x 8" Body	Detail Rev.	
Part Number / Numéro Pièce	**5412ESPR242008B**	Rev.	**0**

This drawing is confidential and must not be reproduced or used without the consent of EXM

Ce dessin est confidentiel et ne doit pas être reproduit ou utilisé sans le consentement de EXM

STANDARD FEATURES ARE NOT LISTED IN THIS HOLE TABLE

HOLE TABLE - LEFT VIEW (CUSTOM FEATURE ONLY)

CUT-OUT	XDIM	YDIM	DESCRIPTION
1	6.500	2.000	GND STUD M6 x 16mm (Inside)

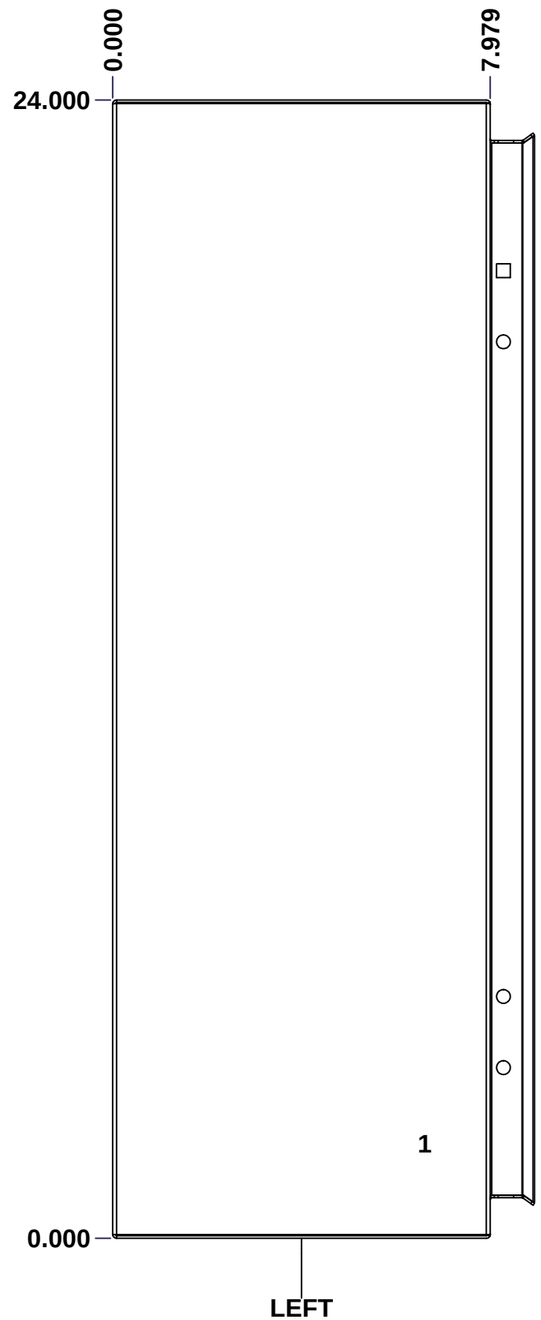

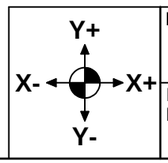

Description	Status
5412ESPR 24" x 20" x 8" Body	
Part Number / Numéro Pièce: **5412ESPR242008B**	Rev. **0**

This drawing is confidential and must not be reproduced or used without the consent of EXM

Ce dessin est confidentiel et ne doit pas être reproduit ou utilisé sans le consentement de EXM

STANDARD FEATURES ARE NOT LISTED IN THIS HOLE TABLE

HOLE TABLE - BACK VIEW (CUSTOM FEATURE ONLY)

CUT-OUT	XDIM	YDIM	DESCRIPTION
1	1.875	1.875	IP STUD M8 x 35mm (Inside)
2	1.875	22.125	IP STUD M8 x 35mm (Inside)
3	18.125	22.125	IP STUD M8 x 35mm (Inside)
4	18.125	1.875	IP STUD M8 x 35mm (Inside)

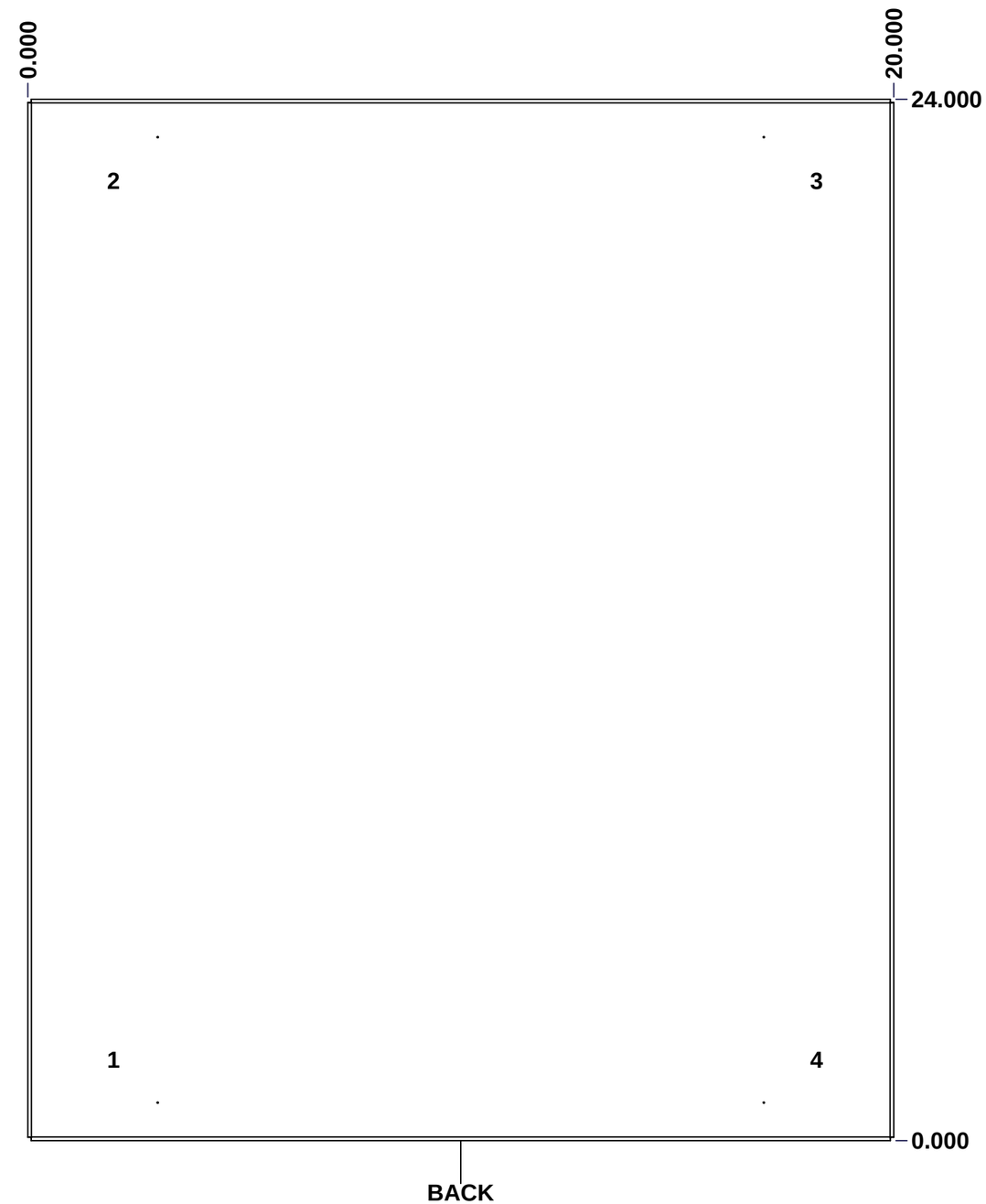

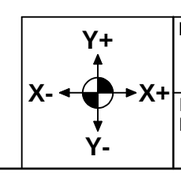

Description	Status
5412ESPR 24" x 20" x 8" Body	
Part Number / Numéro Pièce: **5412ESPR242008B**	Rev. **0**

Tolerance ±1/32" unless otherwise specified

C:\Vault_Workspace\Inventor_Dwg\BoxCad\Result\5412ESPR242008\5412ESPR242008B.idw

Tolérance ±1/32" sauf spécification contraire

This drawing is confidential and must not be reproduced or used without the consent of EXM

Ce dessin est confidentiel et ne doit pas être reproduit ou utilisé sans le consentement de EXM

No.	Revisions	Date	By/Par

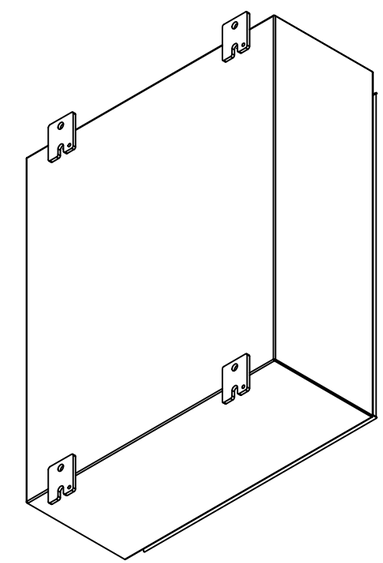

Isometric View

Tél: (450) 979-4373
Fax: (450) 979-4626
www.exmweb.com

Flatness
Aplatissement
Max 3.0mm

Projection

Customer
Client

Date

Drawn By
Dessiné Par
BoxCad: Annie

Date 29/04/2014

Material
Matière
16 Ga H.R.P. & O. (1.4mm)

Color
Couleur
Asa-61 Grey

Finish
Fini
Smooth

Description
5412ESPR 24" x 20" x 8" Body

Detail Rev.

Part Number
Numéro Pièce
5412ESPR242008B

Rev.
0

7 / 7

Qty	Part Number	Rev	Description
1	STK-P-02400S	0	Powder Paint (Asa-61 Grey / Smooth)
4	STK-Q-71000	0	Steel Mounting Tab
4	STK-Q-16005	1	Stud M8 x 35 (No Paint Cap Required)
1	STK-Q-16080	0.1.1	M6 x 16mm Ground Stud
1	5412ESPR242008B-P	0	5412ESPR 24" x 20" x 8" Body Part

Parts List

This drawing is confidential and must not be reproduced or used without the consent of EXM

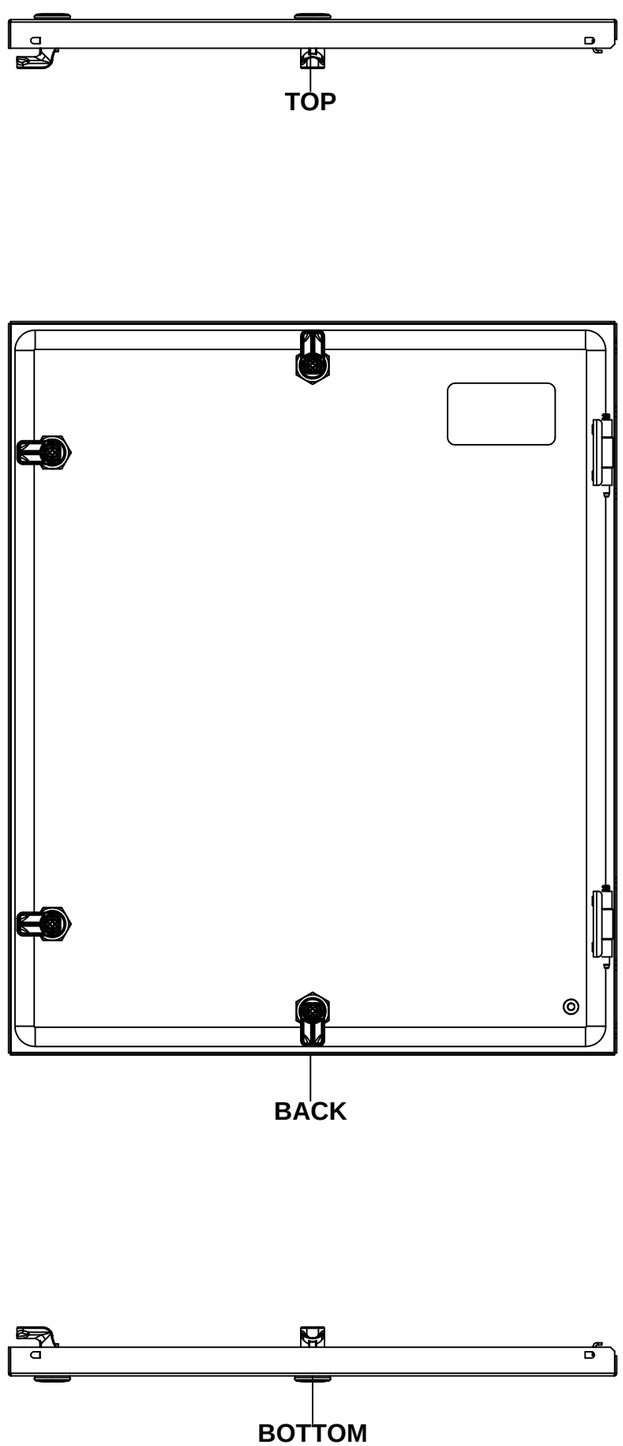

SEE BILL OF MATERIAL ON LAST PAGE

No.	Revisions	Date	By/Par

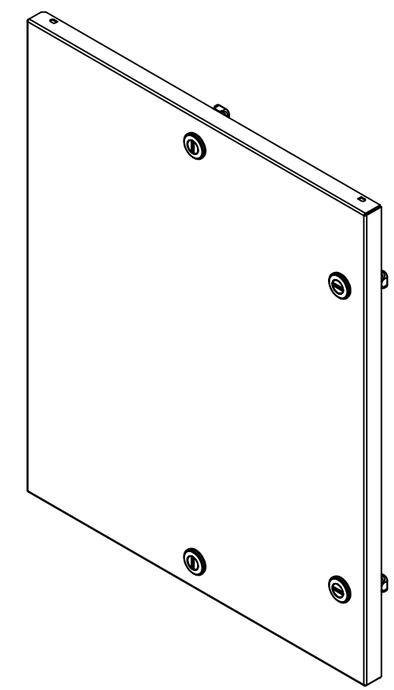

Isometric View

Ce dessin est confidentiel et ne doit pas être reproduit ou utilisé sans le consentement de EXM

Tél: (450) 979-4373
Fax: (450) 979-4626
www.exmweb.com

Flatness / Aplatissement: Max 3.0mm

Projection

Customer / Client		Date	
Drawn By / Dessiné Par	BoxCad: Annie	Date	29/04/2014
Material / Matière	16 Ga H.R.P. & O. (1.4mm)		
Color / Couleur	Asa-61 Grey	Finish / Fini	Smooth
Description	5412ESPR 24" x 20" Cover	Detail Rev.	
Part Number / Numéro Pièce	**5412ESPR242008C**	Rev.	**0**

1 / 3

This drawing is confidential and must not be reproduced or used without the consent of EXM

Ce dessin est confidentiel et ne doit pas être reproduit ou utilisé sans le consentement de EXM

STANDARD FEATURES ARE NOT LISTED IN THIS HOLE TABLE

HOLE TABLE - FRONT VIEW (CUSTOM FEATURE ONLY)

CUT-OUT	XDIM	YDIM	DESCRIPTION
1	1.486	1.567	GND STUD M6 x 16mm (Inside)

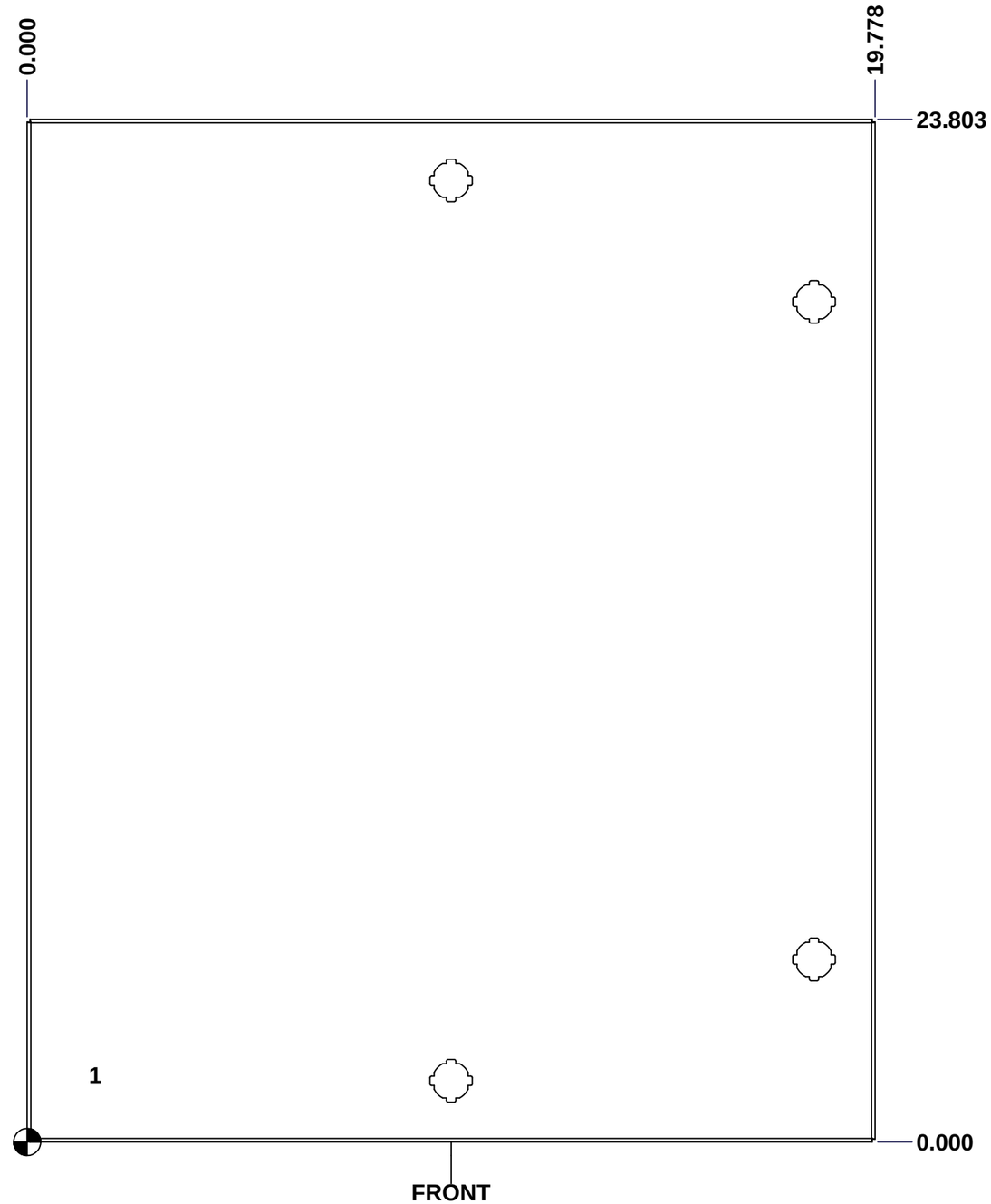

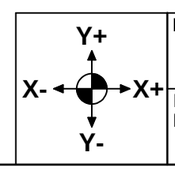

Description	Status
5412ESPR 24" x 20" Cover	(NULL)

Part Number / Numéro Pièce	Rev.	
5412ESPR242008C	**0**	2 / 3

This drawing is confidential and must not be reproduced or used without the consent of EXM

Ce dessin est confidentiel et ne doit pas être reproduit ou utilisé sans le consentement de EXM

No.	Revisions	Date	By/Par

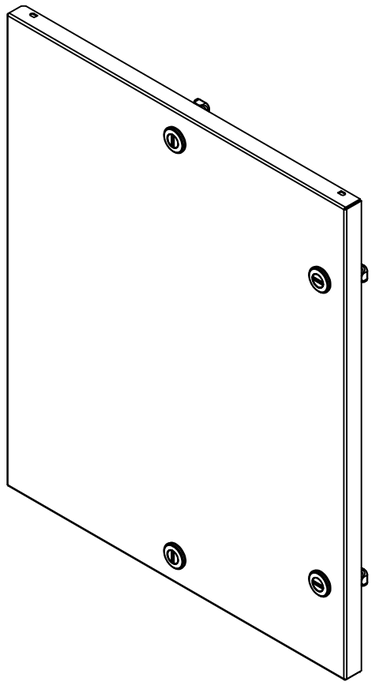

Isometric View

Qty	Part Name	Rev	Description
1	STK-Q-16080	0.1.1	M6 x 16mm Ground Stud
2	STK-Q-33105	4	5412 ESBU Buttable Hinge (Cover Part)
1	STK-P-02400S	0	Powder Paint (Asa-61 Grey / Smooth)
1	STK-S-00100	0.1.1	3.5" x 2" Silver Milar Flexcon Sticker
1	5412ESPR242008G	0	5412ESPR 24" x 20" Cover Gasket
1	5412ESPR242008C-P	0	5412ESPR 24" x 20" Cover Part
4	880 SCQ4-SL	0	5412 ES 1/4 Turn Lock
2	STK-A-33005	1	5412 ESBU Hinge 180° (Body Part)

Parts List

Tél: (450) 979-4373
Fax: (450) 979-4626
www.exmweb.com

Flatness / Aplatissement: Max 3.0mm

Projection

Customer / Client

Date

Drawn By / Dessiné Par: BoxCad: Annie

Date: 29/04/2014

Material / Matière: 16 Ga H.R.P. & O. (1.4mm)

Color / Couleur: Asa-61 Grey

Finish / Fini: Smooth

Description: 5412ESPR 24" x 20" Cover

Detail Rev.

Part Number / Numéro Pièce: **5412ESPR242008C**

Rev. **0**

3 / 3

This drawing is confidential and must not be reproduced or used without the consent of EXM

Ce dessin est confidentiel et ne doit pas être reproduit ou utilisé sans le consentement de EXM

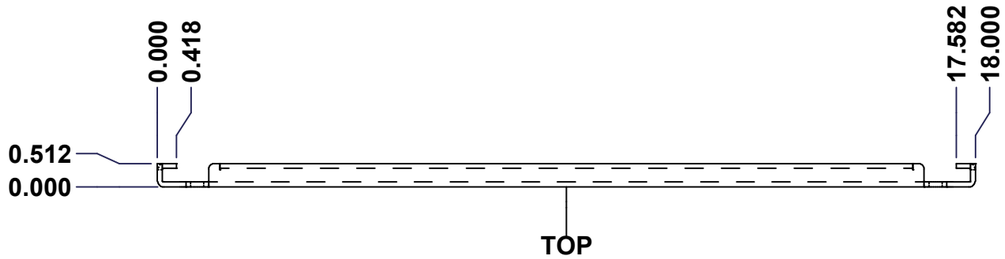

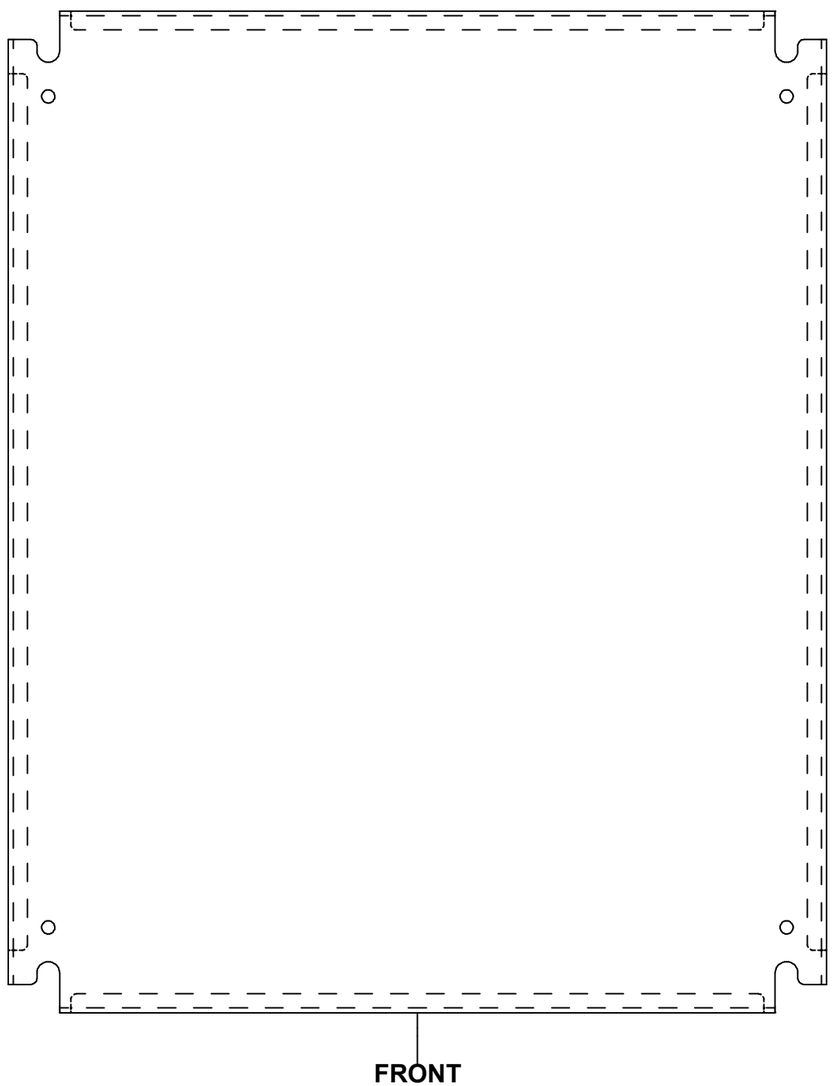

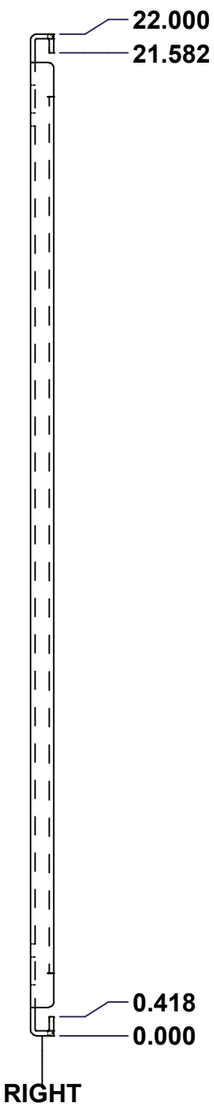

No.	Revisions	Date	By/Par

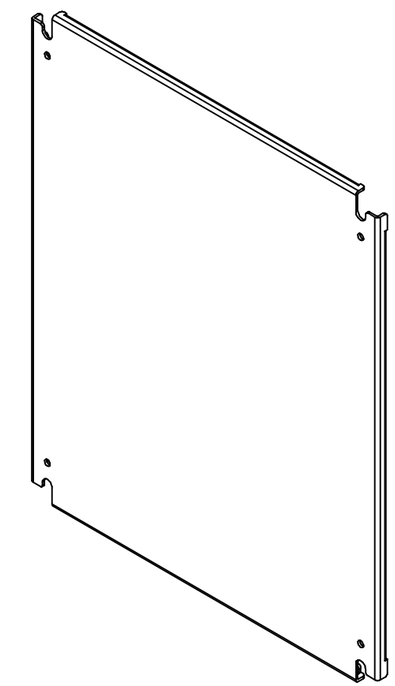

Isometric View

Qty	Part Number	Rev	Description	Material	Color	Finish
1	STK-P-02401S	0	Powder Paint (White / Smooth)	Polyester-Epoxy Hybrid	White RAL9003	Smooth
1	881 SP2420-P	0	881 SP - Inner Panel Part	12 Ga H.R.P. & O.	White	Smooth

Parts List

EXM
Tél: (450) 979-4373
Fax: (450) 979-4626
www.exmweb.com

Flatness / Aplatissement: Max 3.0mm

Projection

Customer / Client:

Date:

Drawn By / Dessiné Par: BoxCad

Date: 1/23/2007

Material / Matière: See Part List

Color / Couleur: See Part List

Finish / Fini: See Part List

Description: 881 SP - Inner Panel

Detail Rev.:

Part Number / Numéro Pièce: **881 SP2420**

Rev.: **0**

1 / 2

Tolerance ±1/32" unless otherwise specified

C:\Vault_Workspace\Inventor_Dwg\Inv-8\881SP\881SP2420.idw

Tolérance ±1/32" sauf spécification contraire

This drawing is confidential and must not be reproduced or used without the consent of EXM

Ce dessin est confidentiel et ne doit pas être reproduit ou utilisé sans le consentement de EXM

Table 1

CUT-OUT	XDIM	YDIM	DESCRIPTION
1	0.875	1.875	GROUND HOLE (RND ∅0.290)
2	17.125	1.875	GROUND HOLE (RND ∅0.290)
3	0.875	20.125	GROUND HOLE (RND ∅0.290)
4	17.125	20.125	GROUND HOLE (RND ∅0.290)

FRONT VIEW

All knockouts are actual size / Les disques défonçables sont grandeur réel

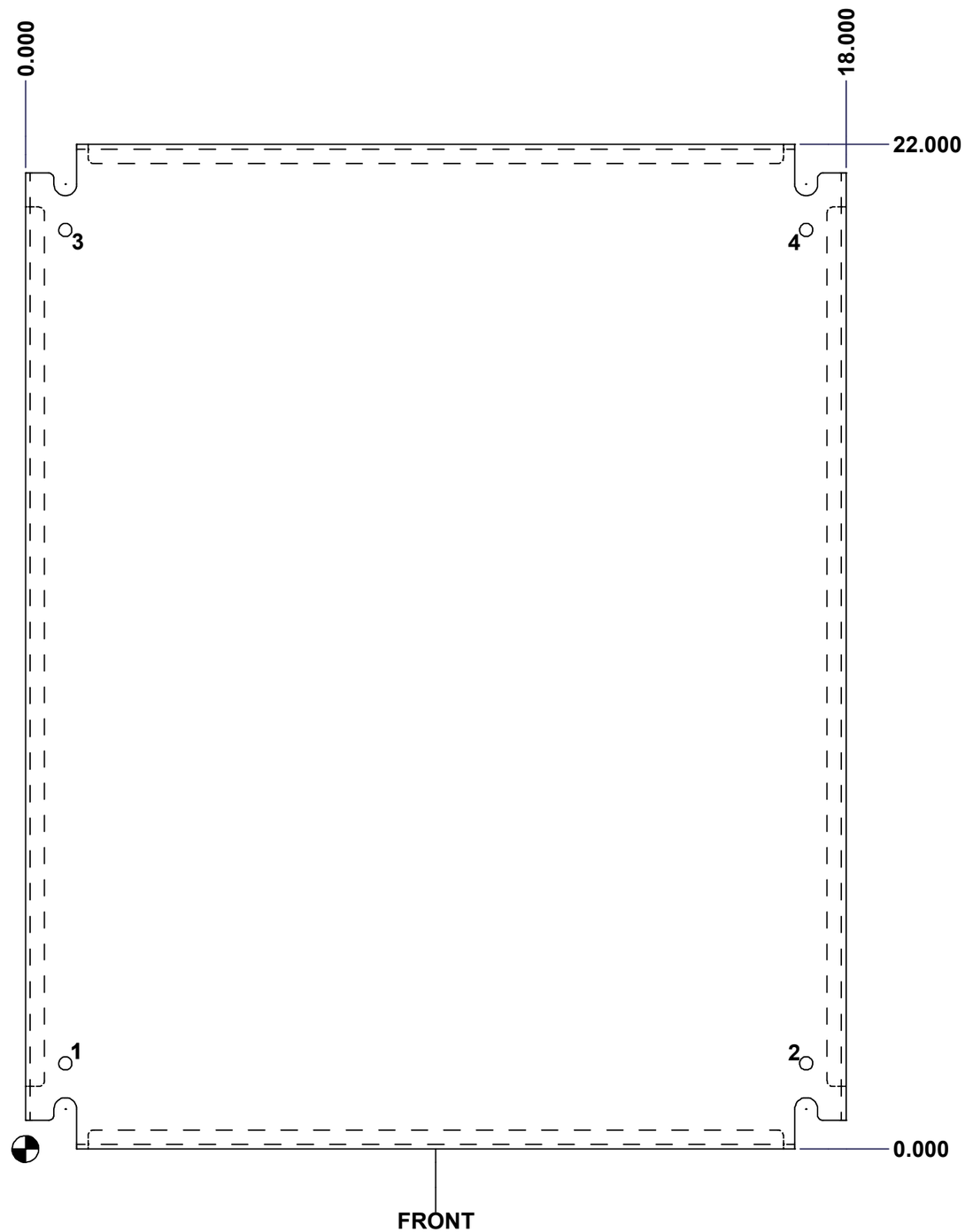

No.	Revisions	Date	By/Par

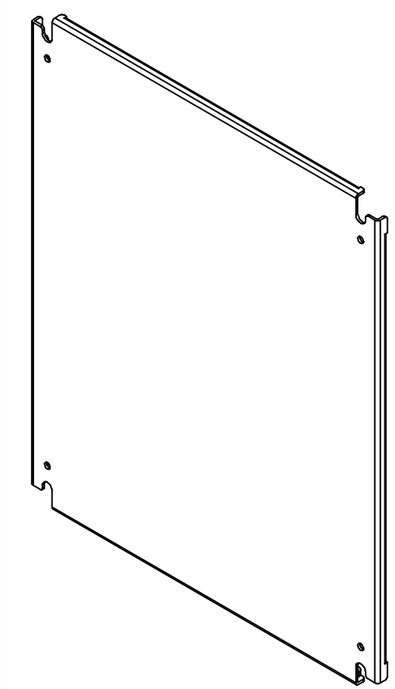

Isometric View

Tél: (450) 979-4373
Fax: (450) 979-4626
www.exmweb.com

Flatness / Aplatissement: Max 3.0mm

Projection

Customer / Client		Date	
Drawn By / Dessiné Par	BoxCad	Date	1/23/2007
Material / Matière	See Part List		
Color / Couleur	See Part List	Finish / Fini	See Part List
Description	881 SP - Inner Panel	Detail Rev.	
Part Number / Numéro Pièce	**881 SP2420**	Rev.	**0**

2 / 2