This drawing is confidential and must not be reproduced or used without the consent of EXM

Ce dessin est confidentiel et ne doit pas être reproduit ou utilisé sans le consentement de EXM

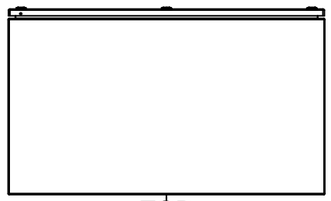

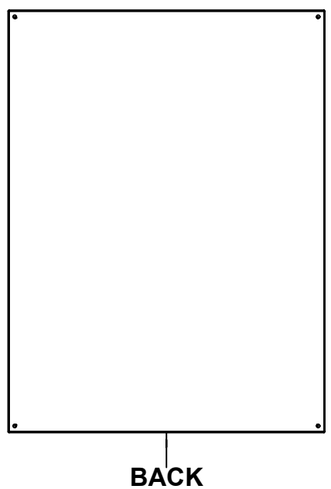

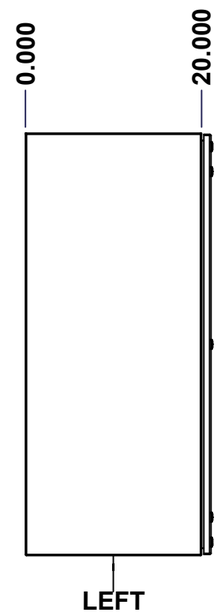

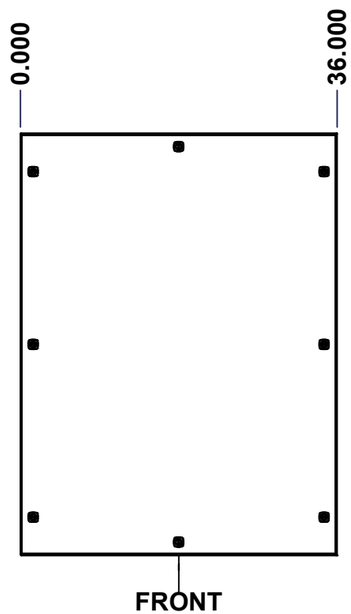

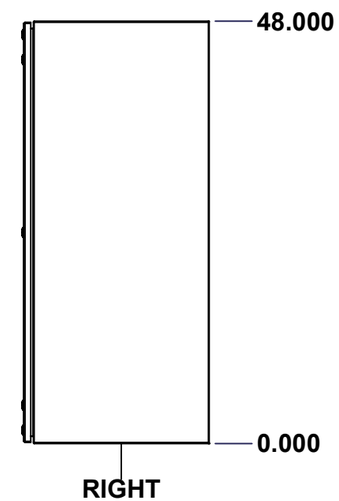

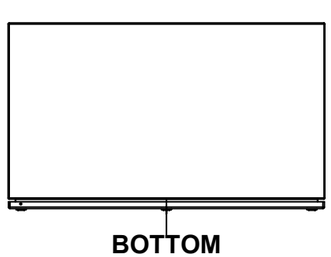

SEE BILL OF MATERIAL ON LAST PAGE

No.	Revisions	Date	By/Par

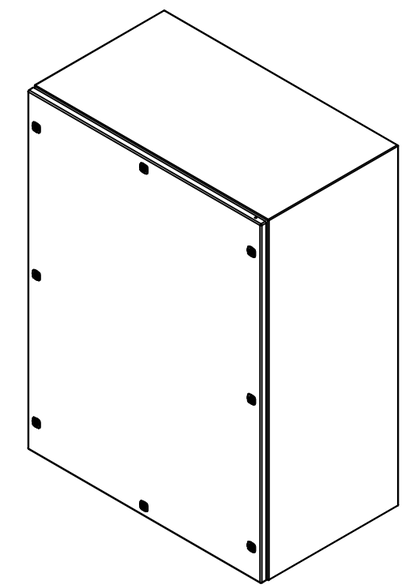

Isometric View

Tél: (450) 979-4373
Fax: (450) 979-4626
www.exmweb.com

Flatness / Aplatissement: Max 3.0mm

Projection

Customer / Client		Date	
Drawn By / Dessiné Par	BoxCad: BoxCad	Date	07-Jul-23
Material / Matière	14 Ga Cold Rolled A1008 CS Type B (1.7mm)		
Color / Couleur	Asa-61 Grey	Finish / Fini	Smooth
Description	5412ESQT 48" x 36" x 20" Assembly	Detail Rev.	
Part Number / Numéro Pièce	**5412ESQT483620NOIP**	Rev. **0**	1 / 9

This drawing is confidential and must not be reproduced or used without the consent of EXM

Ce dessin est confidentiel et ne doit pas être reproduit ou utilisé sans le consentement de EXM

NOTE

ITEM	DESCRIPTION
1	NEMA 4/12 Enclosure
2	C/W Standard ground studs on box and cover
3	C/W Standard door stiffener
4	W/O Inner panel
5	C/W Standard inner panel mounting studs

No.	Revisions	Date	By/Par

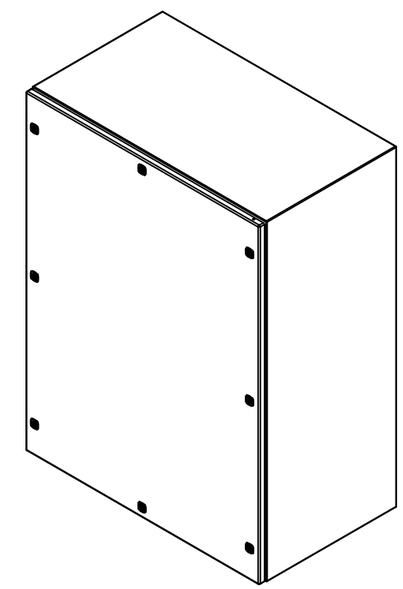

Isometric View

PACKING

ITEM	QTY	DESCRIPTION
Cardboard sleeve	2	Top and Bottom
Cardboard strip	2	Between back of enclosure and inner panel
Plastic bag	1	To protect cover surface and inside gasket
Cardboard corner	4	To reinforced for the plastic strap tightening
Plastic strap - Black	2	To Squeeze the 2 cardboard sleeve together
Packaging label	3	White label with PN
Plastic strap- Green	2	To secure the enclosure to the wood pallet
Wood Pallet	1	2" deeper and 3" larger than enclosure size

Qty	Part Number	Rev	Description
1	STK-K-01800	5	5412 ES Accessory Kit
1	5412ESQT483620NOIPC	0	5412ESQT 48" x 36" Cover
1	5412ESQT483620NOIPB	0	5412ESQT 48" x 36" x 20" Body

Parts List

Tél: (450) 979-4373
Fax: (450) 979-4626
www.exmweb.com

Flatness / Aplatissement: Max 3.0mm

Projection

Customer / Client		Date	
Drawn By / Dessiné Par	BoxCad: BoxCad	Date	07-Jul-23
Material / Matière	14 Ga Cold Rolled A1008 CS Type B (1.7mm)		
Color / Couleur	Asa-61 Grey	Finish / Fini	Smooth
Description	5412ESQT 48" x 36" x 20" Assembly	Detail Rev.	
Part Number / Numéro Pièce	**5412ESQT483620NOIP**	Rev.	**0**

This drawing is confidential and must not be reproduced or used without the consent of EXM

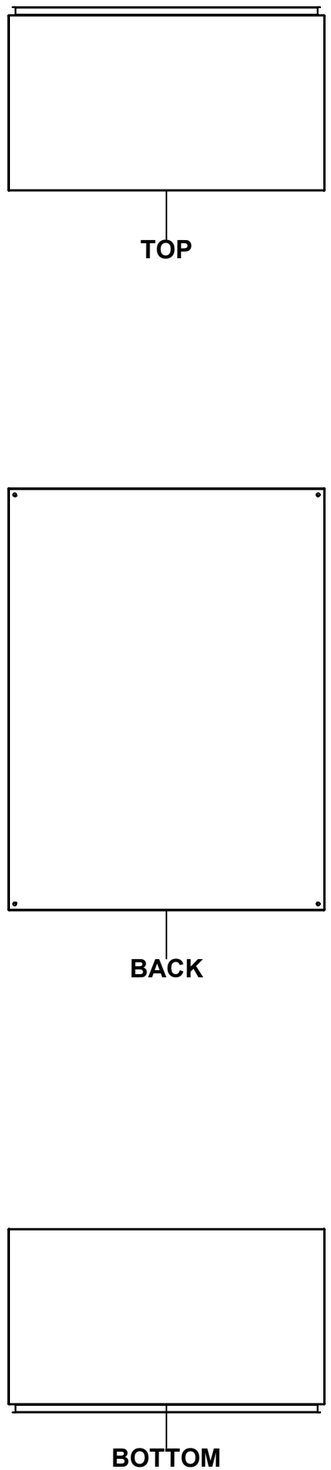

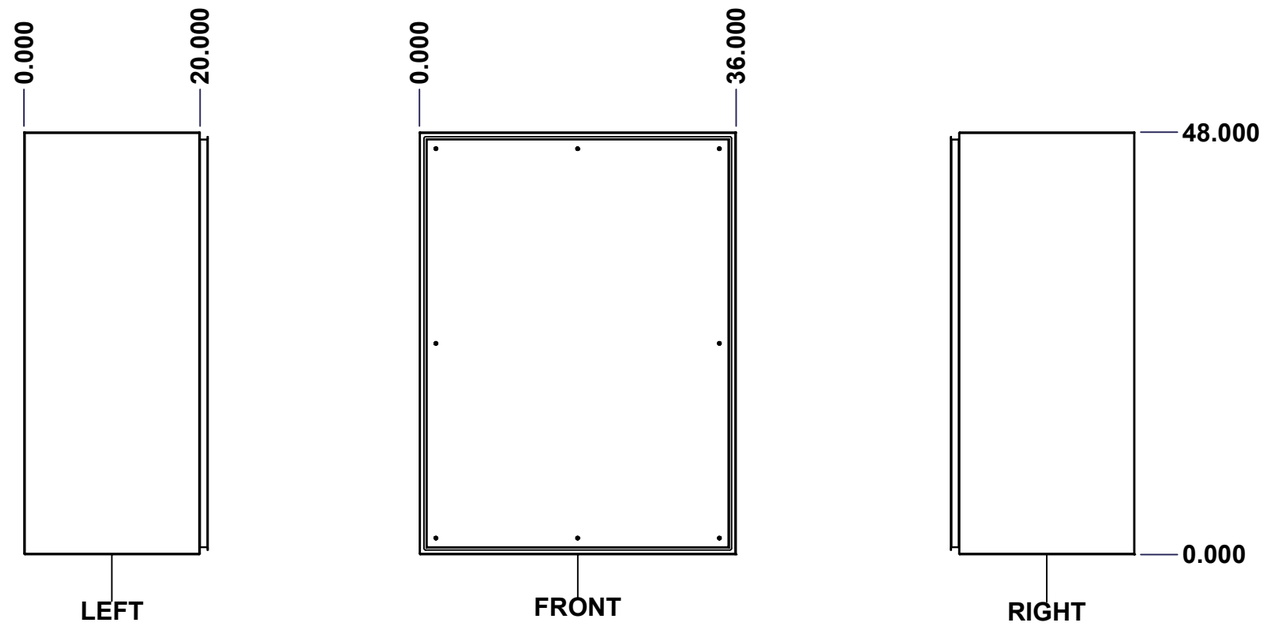

SEE BILL OF MATERIAL ON LAST PAGE

No.	Revisions	Date	By/Par

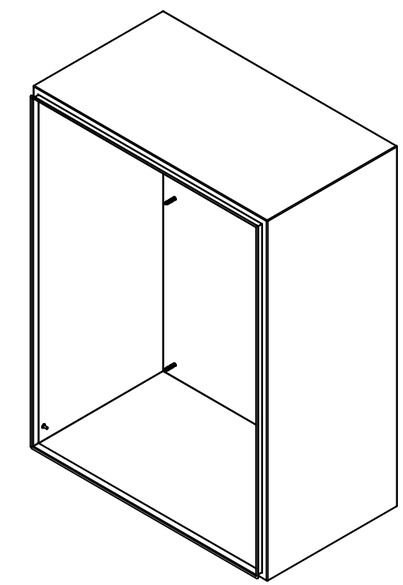

Isometric View

Ce dessin est confidentiel et ne doit pas être reproduit ou utilisé sans le consentement de EXM

Tél: (450) 979-4373
Fax: (450) 979-4626
www.exmweb.com

Flatness / Aplatissement: Max 3.0mm

Projection

Customer / Client		Date	
Drawn By / Dessiné Par	BoxCad: BoxCad	Date	07-Jul-23
Material / Matière	14 Ga Cold Rolled A1008 CS Type B (1.7mm)		
Color / Couleur	Asa-61 Grey	Finish / Fini	Smooth
Description	5412ESQT 48" x 36" x 20" Body	Detail Rev.	
Part Number / Numéro Pièce	5412ESQT483620NOIPB	Rev.	0

3 / 9

This drawing is confidential and must not be reproduced or used without the consent of EXM

Ce dessin est confidentiel et ne doit pas être reproduit ou utilisé sans le consentement de EXM

STANDARD FEATURES ARE NOT LISTED IN THIS HOLE TABLE

HOLE TABLE - LEFT VIEW (CUSTOM FEATURE ONLY)

CUT-OUT	XDIM	YDIM	DESCRIPTION
1	18.500	2.000	GND STUD M6 x 16mm (Inside)

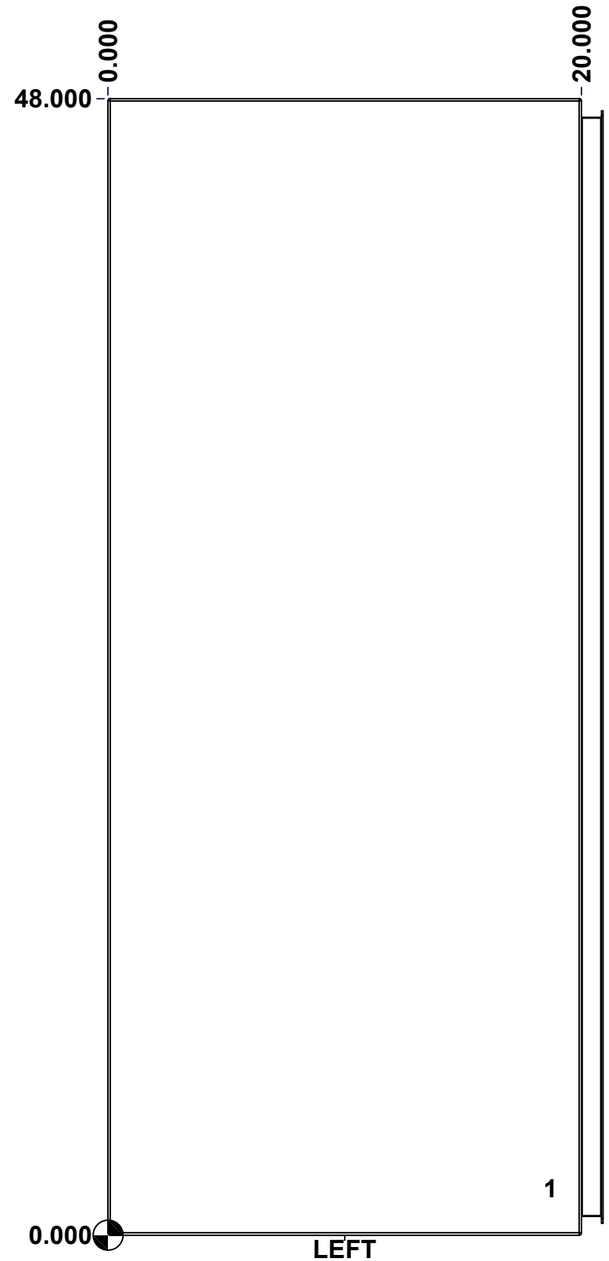

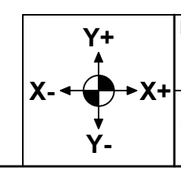

Description	Status
5412ESQT 48" x 36" x 20" Body	(NULL)

Part Number / Numéro Pièce	Rev.	
5412ESQT483620NOIPB	**0**	4 / 9

This drawing is confidential and must not be reproduced or used without the consent of EXM

Ce dessin est confidentiel et ne doit pas être reproduit ou utilisé sans le consentement de EXM

STANDARD FEATURES ARE NOT LISTED IN THIS HOLE TABLE

HOLE TABLE - BACK VIEW (CUSTOM FEATURE ONLY)

CUT-OUT	XDIM	YDIM	DESCRIPTION
1	1.875	1.875	IP STUD M8 x 35mm (Inside)
2	1.875	46.125	IP STUD M8 x 35mm (Inside)
3	34.125	46.125	IP STUD M8 x 35mm (Inside)
4	34.125	1.875	IP STUD M8 x 35mm (Inside)
5	1.875	24.000	IP STUD M8 x 35mm (Inside)
6	34.125	24.000	IP STUD M8 x 35mm (Inside)
7	18.000	1.875	IP STUD M8 x 35mm (Inside)
8	18.000	46.125	IP STUD M8 x 35mm (Inside)
---	---	---	---
9	35.250	0.750	RND Ø0.390
10	35.250	47.250	RND Ø0.390
11	0.750	47.250	RND Ø0.390
12	0.750	0.750	RND Ø0.390

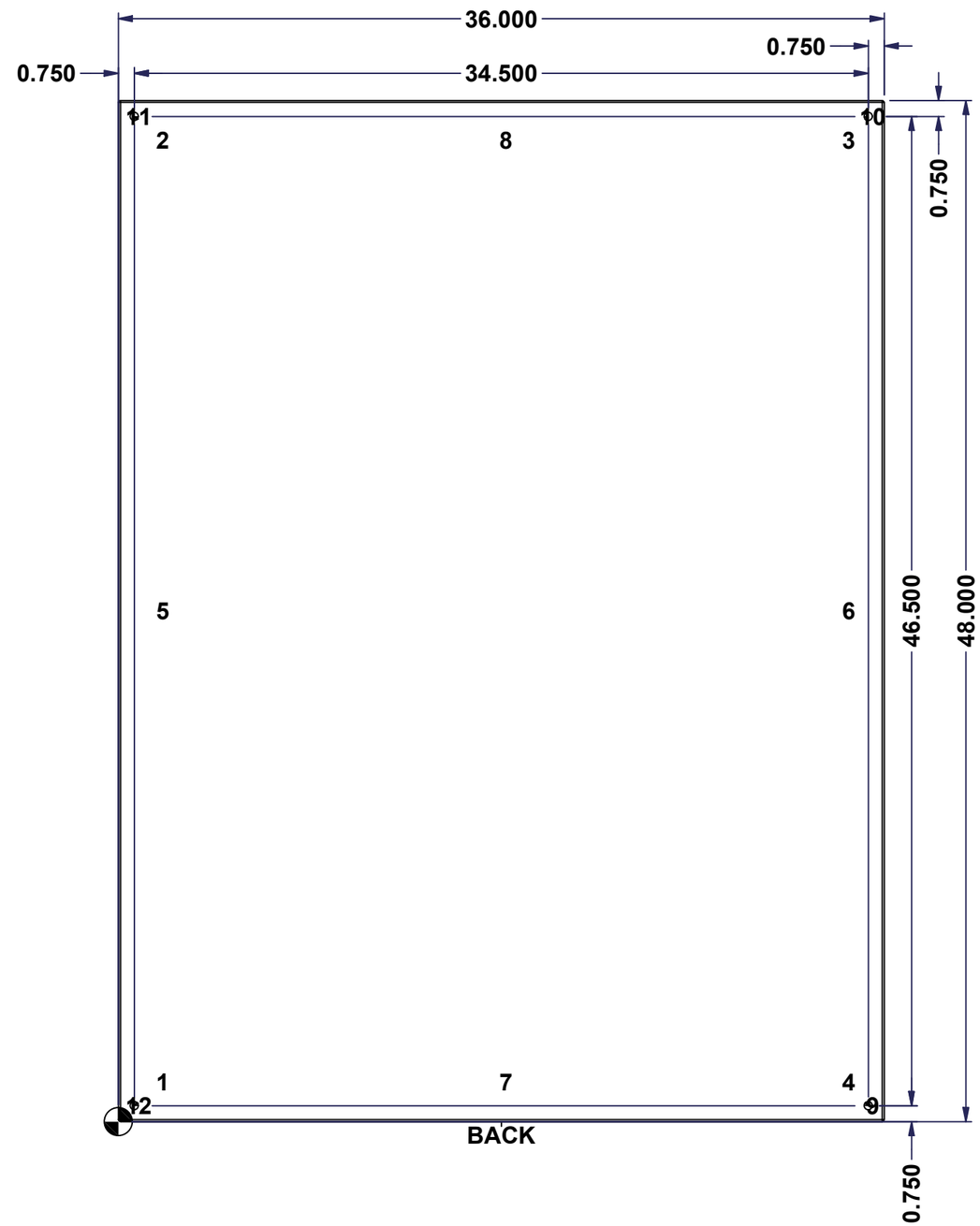

Y+ / X- / X+ / Y-	Description 5412ESQT 48" x 36" x 20" Body	Status (NULL)	
	Part Number Numéro Pièce **5412ESQT483620NOIPB**	Rev. **0**	5 / 9

Tolerance ±1/32" unless otherwise specified

C:\Vault_Workspace\Inventor_Dwg\BoxCad\Result\5412ESQT483620NOIP\5412ESQT483620NOIP.idw

Tolérance ±1/32" sauf spécification contraire

This drawing is confidential and must not be reproduced or used without the consent of EXM

Ce dessin est confidentiel et ne doit pas être reproduit ou utilisé sans le consentement de EXM

No.	Revisions	Date	By/Par

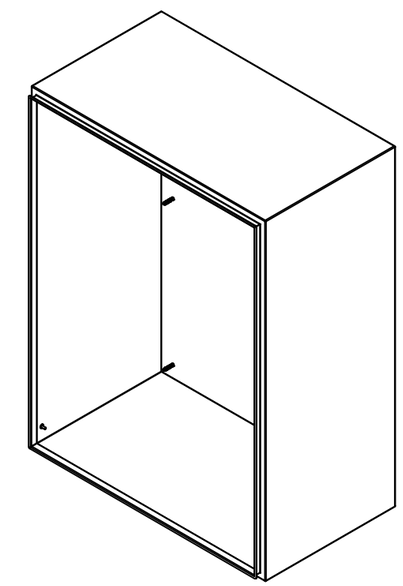

Isometric View

Parts List			
Qty	Part Number	Rev	Description
1	STK-Q-16080	0	Ground Stud M6 x 16mm Steel
1	STK-P-02400S	0	Powder Paint (Asa-61 Grey / Smooth)
8	STK-Q-16005	1	Stud M8 x 35 (No Paint Cap Required)
1	5412ESQT483620NOIPB-P	0	5412ESQT 48" x 36" x 20" Body Part

Tél: (450) 979-4373
Fax: (450) 979-4626
www.exmweb.com

Flatness / Aplatissement: Max 3.0mm

Projection

Customer / Client

Date

Drawn By / Dessiné Par: BoxCad: BoxCad

Date: 07-Jul-23

Material / Matière: 14 Ga Cold Rolled A1008 CS Type B (1.7mm)

Color / Couleur: Asa-61 Grey

Finish / Fini: Smooth

Description: 5412ESQT 48" x 36" x 20" Body

Detail Rev.

Part Number / Numéro Pièce: **5412ESQT483620NOIPB**

Rev.: **0**

6 / 9

Tolerance ±1/32" unless otherwise specified

C:\Vault_Workspace\Inventor_Dwg\BoxCad\Result\5412ESQT483620NOIP\5412ESQT483620NOIP.idw

Tolérance ±1/32" sauf spécification contraire

This drawing is confidential and must not be reproduced or used without the consent of EXM

Ce dessin est confidentiel et ne doit pas être reproduit ou utilisé sans le consentement de EXM

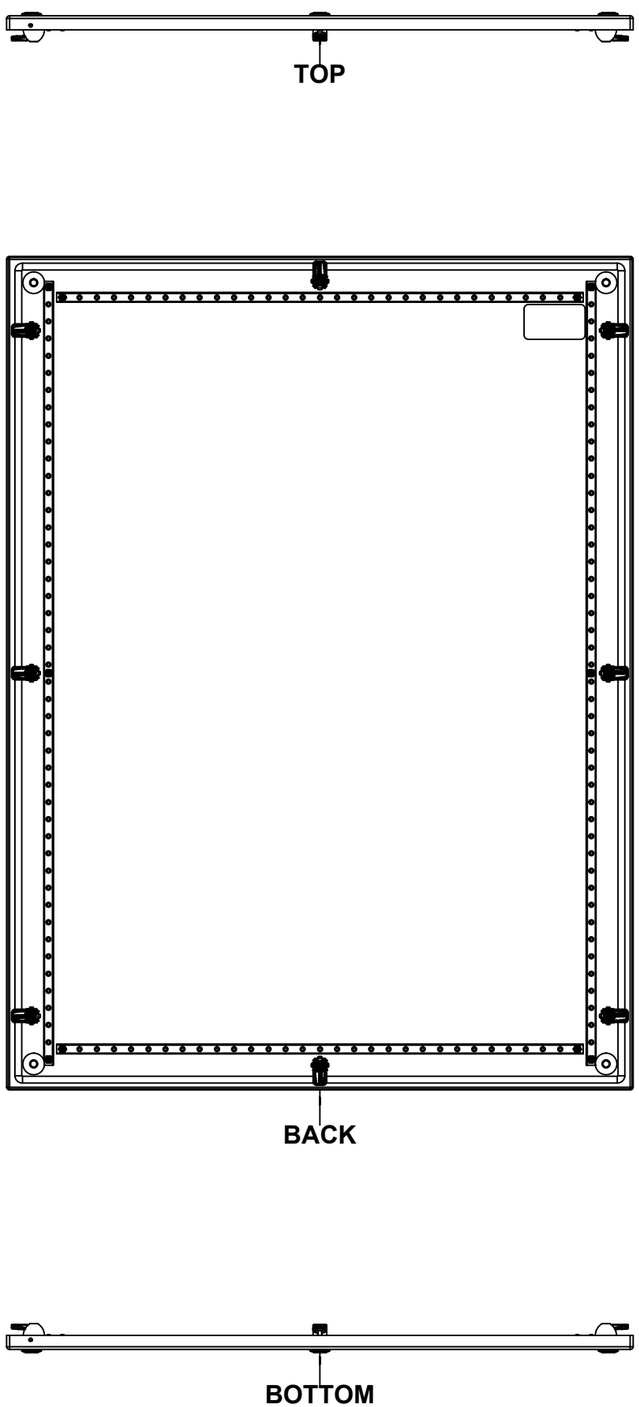

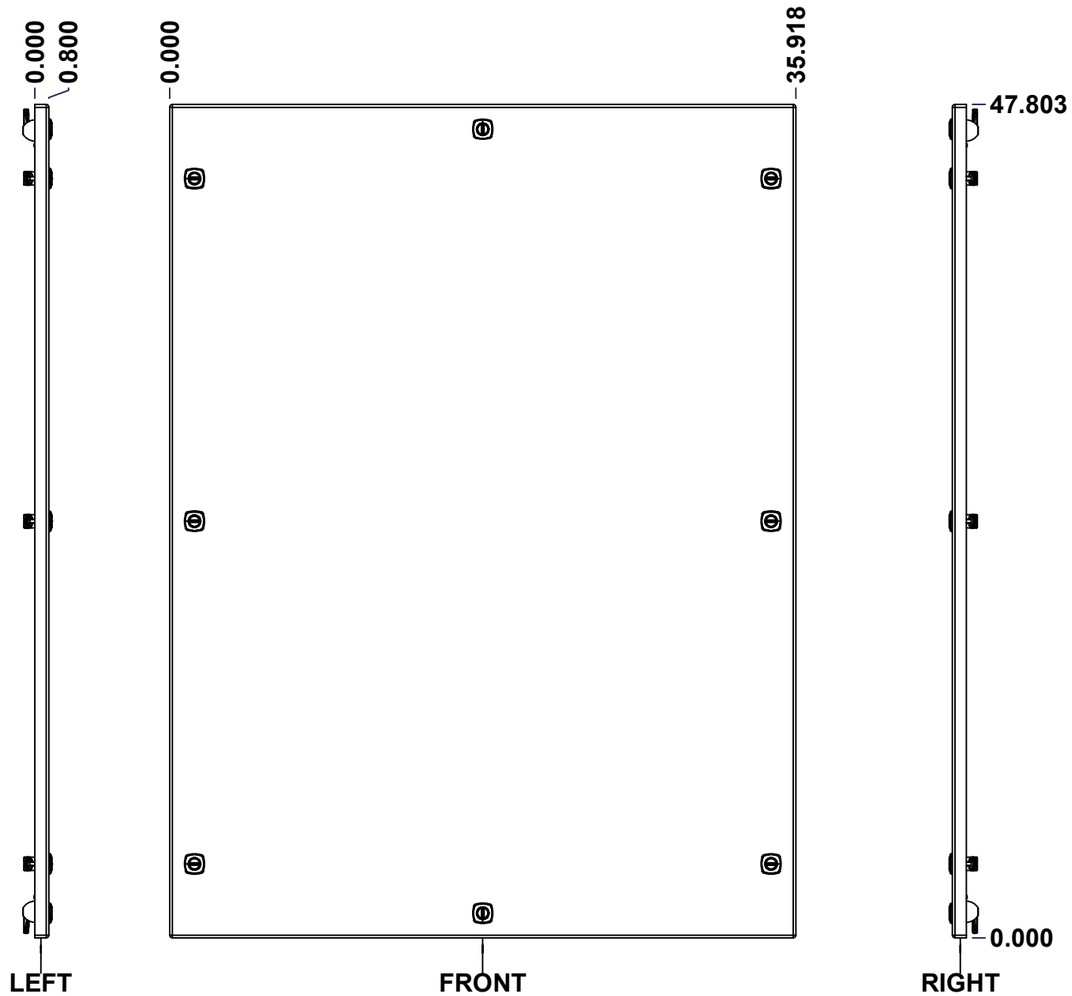

No.	Revisions	Date	By/Par

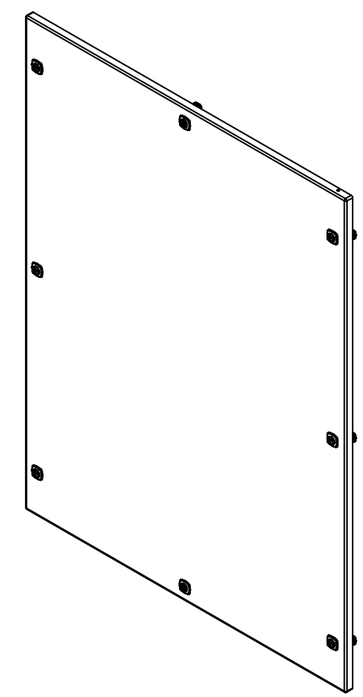

Isometric View

Tél: (450) 979-4373
Fax: (450) 979-4626
www.exmweb.com

Flatness / Aplatissement: Max 3.0mm

Projection

Customer / Client		Date	
Drawn By / Dessiné Par	BoxCad: BoxCad	Date	07-Jul-23
Material / Matière	14 Ga Cold Rolled A1008 CS Type B (1.7mm)		
Color / Couleur	Asa-61 Grey	Finish / Fini	Smooth
Description	5412ESQT 48" x 36" Cover	Detail Rev.	
Part Number / Numéro Pièce	5412ESQT483620NOIPC	Rev. 0	7 / 9

SEE BILL OF MATERIAL ON LAST PAGE

This drawing is confidential and must not be reproduced or used without the consent of EXM

Ce dessin est confidentiel et ne doit pas être reproduit ou utilisé sans le consentement de EXM

STANDARD FEATURES ARE NOT LISTED IN THIS HOLE TABLE

HOLE TABLE - FRONT VIEW (CUSTOM FEATURE ONLY)

CUT-OUT	XDIM	YDIM	DESCRIPTION
1	2.401	1.756	STUD M6 x 18mm (Inside)
2	2.401	46.047	STUD M6 x 18mm (Inside)
3	33.517	46.047	STUD M6 x 18mm (Inside)
4	33.517	1.756	STUD M6 x 18mm (Inside)
5	2.401	23.902	STUD M6 x 18mm (Inside)
6	33.517	23.902	STUD M6 x 18mm (Inside)
7	3.195	2.350	STUD M6 x 18mm (Inside)
8	3.195	45.453	STUD M6 x 18mm (Inside)
9	32.723	45.453	STUD M6 x 18mm (Inside)
10	32.723	2.350	STUD M6 x 18mm (Inside)
11	1.550	1.500	STUD M6 x 18mm (Inside)
12	34.368	1.500	STUD M6 x 18mm (Inside)
13	1.550	46.303	STUD M6 x 18mm (Inside)
14	34.368	46.303	STUD M6 x 18mm (Inside)
---	---	---	---
15	34.494	23.902	880 SCQ4-SL
16	4.500	44.053	LABEL_EXM (Inside)
17	1.424	43.553	880 SCQ4-SL
18	1.424	23.902	880 SCQ4-SL
19	1.424	4.250	880 SCQ4-SL
20	34.494	43.553	880 SCQ4-SL
21	34.494	4.250	880 SCQ4-SL
22	17.959	46.379	880 SCQ4-SL
23	17.959	1.424	880 SCQ4-SL

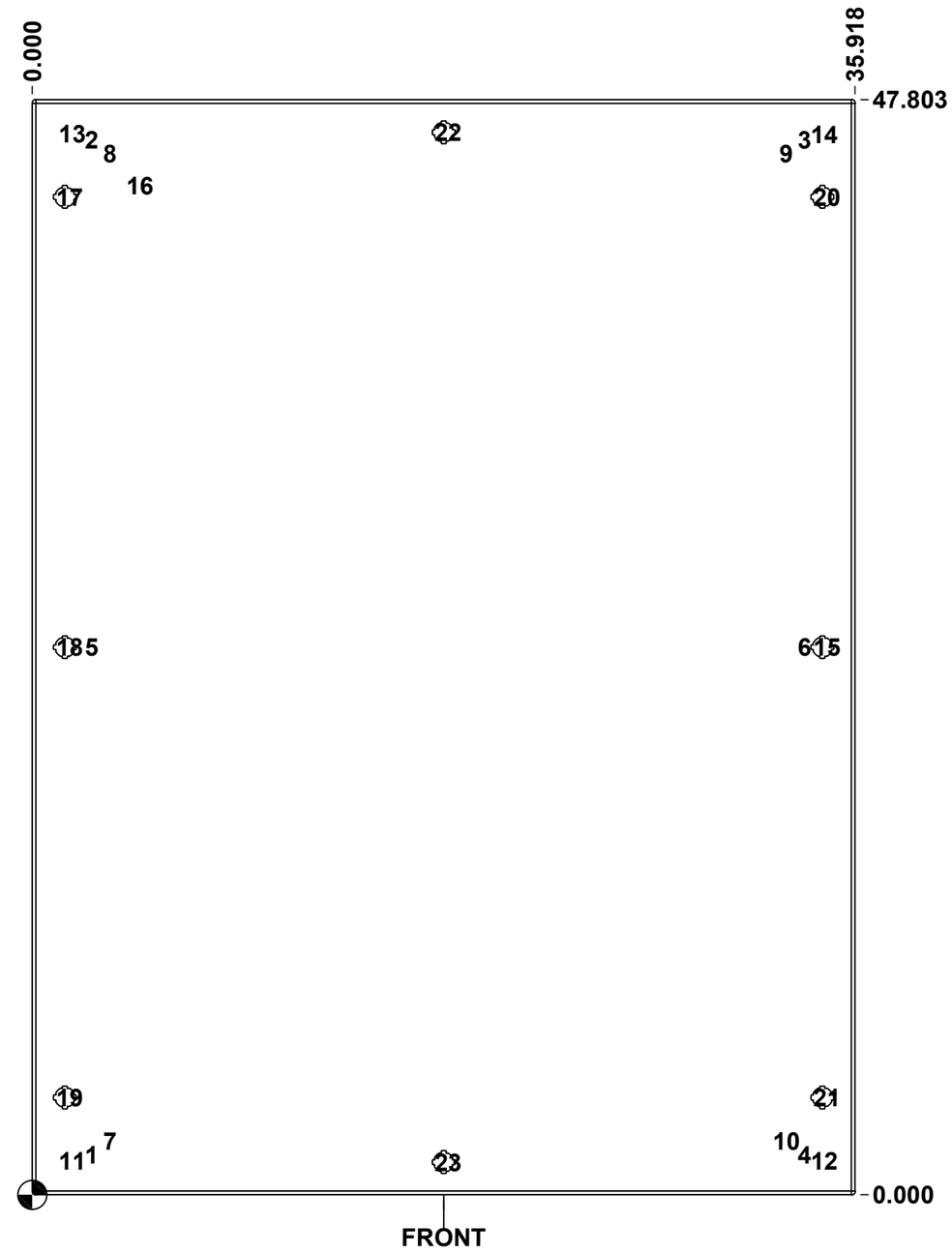

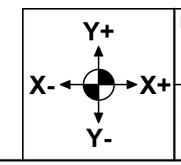

Description	Status
5412ESQT 48" x 36" Cover	(NULL)
Part Number / Numéro Pièce: **5412ESQT483620NOIPC**	Rev. **0**

Tolerance ±1/32" unless otherwise specified

C:\Vault_Workspace\Inventor_Dwg\BoxCad\Result\5412ESQT483620NOIP\5412ESQT483620NOIP.idw

Tolérance ±1/32" sauf spécification contraire

This drawing is confidential and must not be reproduced or used without the consent of EXM

Ce dessin est confidentiel et ne doit pas être reproduit ou utilisé sans le consentement de EXM

No.	Revisions	Date	By/Par

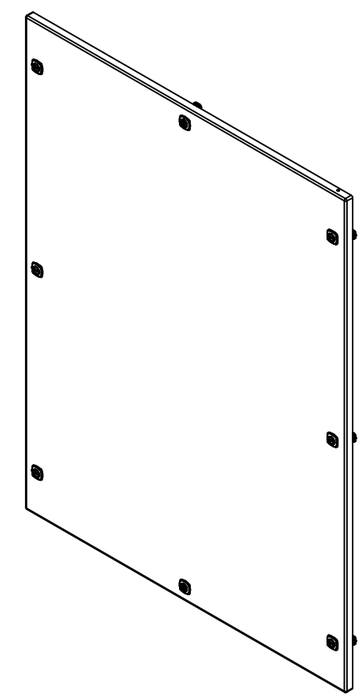

Isometric View

QTY	Part Number	Rev	Description
1	STK-S-00100	0	3.5" x 2" Silver Milar Flexcon Sticker
1	STK-P-02400S	0	Powder Paint (Asa-61 Grey / Smooth)
2	STK-Q-46025-36-3	0.1.1	5412 ES Horizontal Door Stiffener 36" (3 Pts)
2	STK-Q-46020-48	5	5412 ES Vertical Door Stiffener 48"
14	STK-Q-16055	1	M6 x 18mm Stud (No Paint Cap Required)
1	5412ESQT483620NOIPG	0	5412ESQT 48" x 36" Cover Gasket Part
1	5412ESQT483620NOIPC-P	0	5412ESQT 48" x 36" Cover Part
8	STK-K-12500	16	5412 ES 1/4 Turn Lock
10	STK-Q-07220	1	M6 Nylon Insert Lock Nut
4	STK-Q-46515	3	5412 ES Door Support with Brass Insert

Parts List

Tél: (450) 979-4373
Fax: (450) 979-4626
www.exmweb.com

Flatness / Aplatissement: Max 3.0mm

Projection

Customer / Client

Date

Drawn By / Dessiné Par: BoxCad: BoxCad

Date: 07-Jul-23

Material / Matière: 14 Ga Cold Rolled A1008 CS Type B (1.7mm)

Color / Couleur: Asa-61 Grey

Finish / Fini: Smooth

Description: 5412ESQT 48" x 36" Cover

Detail Rev.

Part Number / Numéro Pièce: **5412ESQT483620NOIPC**

Rev.: **0**

9 / 9