No.	Revisions	Date	By/Par

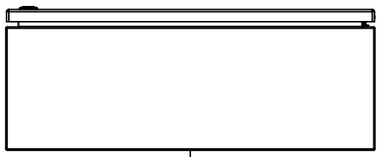

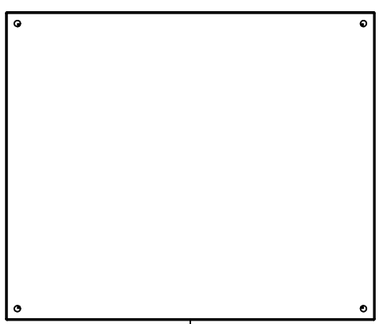

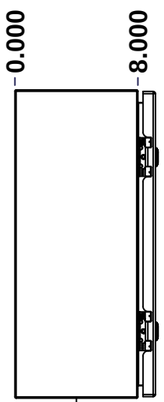

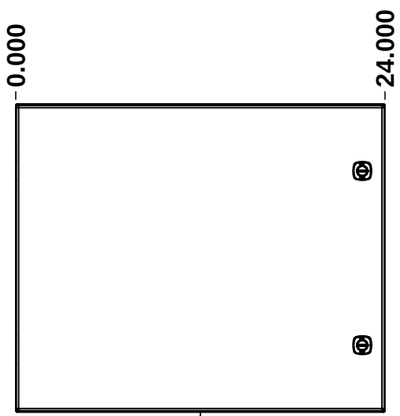

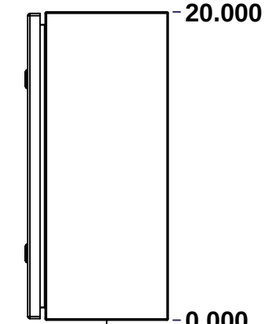

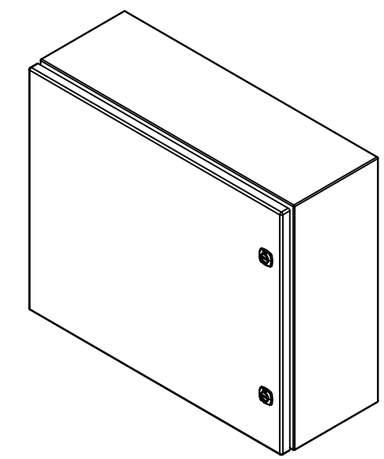

Isometric View

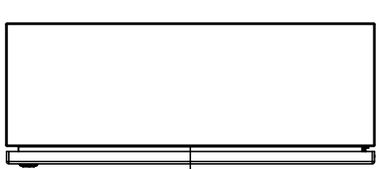

GRAIN DIRECTION:
TOP/BOTTOM: HORIZONTAL
LEFT/RIGHT/BACK/FRONT:VERTICAL

SEE BILL OF MATERIAL ON LAST PAGE

Tél: (450) 979-4373
Fax: (450) 979-4626
www.exmweb.com

Flatness Aplatissement	Max 3.0mm		
Projection			
Customer Client		Date	
Drawn By Dessiné Par	BoxCad: BoxCad	Date	03-May-22
Material Matière	16 Ga Stainless Steel 316 (1.4mm)		
Color Couleur	Unpainted	Finish Fini	Brushed
Description	5412ESS 20" x 24" x 8" Assembly	Detail Rev.	
Part Number Numéro Pièce	**5412ESS2024086NOIP**	Rev.	**0**

Tolerance ±1/32" unless otherwise specified

C:\Vault_Workspace\Inventor_Dwg\BoxCad\Result\5412ESS2024086NOIP\5412ESS2024086NOIP.idw

Tolérance ±1/32" sauf spécification contraire

NOTE

ITEM	DESCRIPTION
1	NEMA 4X Enclosure
2	C/W Standard ground studs on box and cover
3	C/W Standard door stiffener
4	W/O Inner panel
5	C/W Standard inner panel mounting studs

No.	Revisions	Date	By/Par

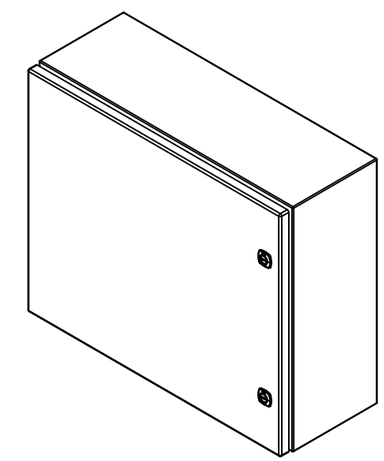

Isometric View

Tél: (450) 979-4373
Fax: (450) 979-4626
www.exmweb.com

Flatness
Aplatissement
Max 3.0mm

Projection

Customer Client		Date	
Drawn By Dessiné Par	BoxCad: BoxCad	Date	03-May-22
Material Matière	16 Ga Stainless Steel 316 (1.4mm)		
Color Couleur	Unpainted	Finish Fini	Brushed
Description	5412ESS 20" x 24" x 8" Assembly	Detail Rev.	
Part Number Numéro Pièce	**5412ESS2024086NOIP**	Rev. **0**	2 / 2

PACKING

ITEM	QTY	DESCRIPTION
Cardboard sleeve	2	Top and Bottom
Cardboard strip	2	Between back of enclosure and inner panel
Plastic bag	1	To protect cover surface and inside gasket
Plastic strap - Black	2	To Squeeze the 2 cardboard sleeve together
Packaging label	1	White label with product number

Parts List

Qty	Part Number	Rev	Description
1	880 PP	6	Self Adhesive Print Pocket
1	STK-K-01800	5	5412 ES Accessory Kit
1	5412ESS2024086NOIPC	0	5412ESS 20" x 24" Cover
1	5412ESS2024086NOIPB	0	5412ESS 20" x 24" x 8" Body
2	STK-Q-04051-07	8	M6 x 7mm Stainless Steel Hexagon Socket Head Machine Screw with Nyseal

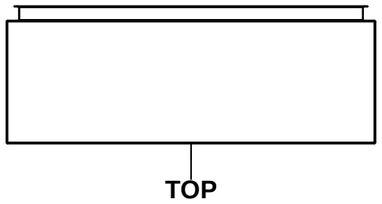

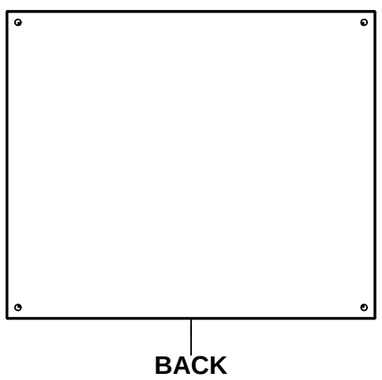

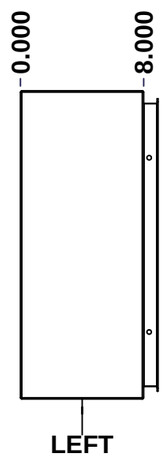

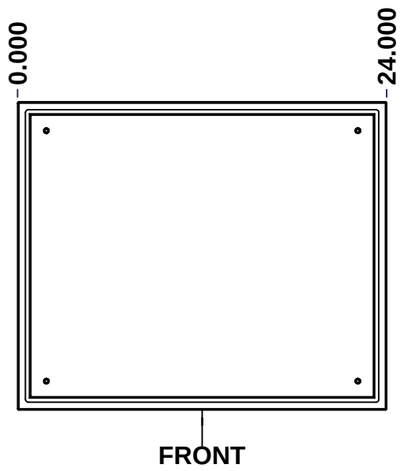

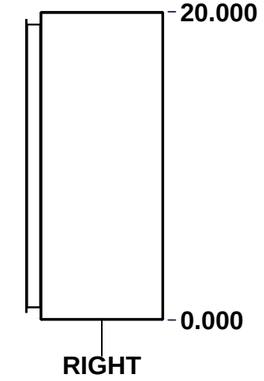

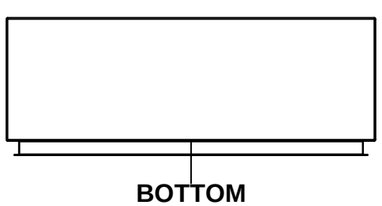

SEE BILL OF MATERIAL ON LAST PAGE

No.	Revisions	Date	By/Par

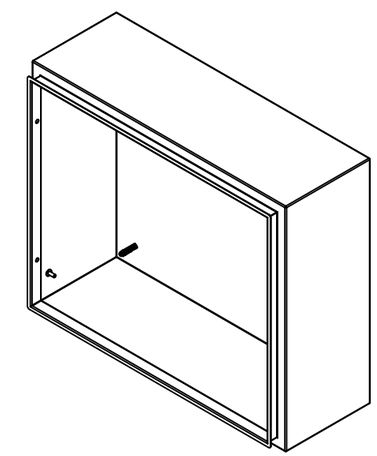

Isometric View

Tél: (450) 979-4373
Fax: (450) 979-4626
www.exmweb.com

Flatness / Aplatissement: Max 3.0mm

Projection

Customer / Client		Date	
Drawn By / Dessiné Par	BoxCad: BoxCad	Date	03-May-22
Material / Matière	16 Ga Stainless Steel 316 (1.4mm)		
Color / Couleur	Unpainted	Finish / Fini	Brushed
Description	5412ESS 20" x 24" x 8" Body	Detail Rev.	
Part Number / Numéro Pièce	**5412ESS2024086NOIPB**	Rev.	**0**

STANDARD FEATURES ARE NOT LISTED IN THIS HOLE TABLE

HOLE TABLE - LEFT VIEW (CUSTOM FEATURE ONLY)

CUT-OUT	XDIM	YDIM	DESCRIPTION
1	6.500	2.000	GND STUD M6 x 16mm (Inside)

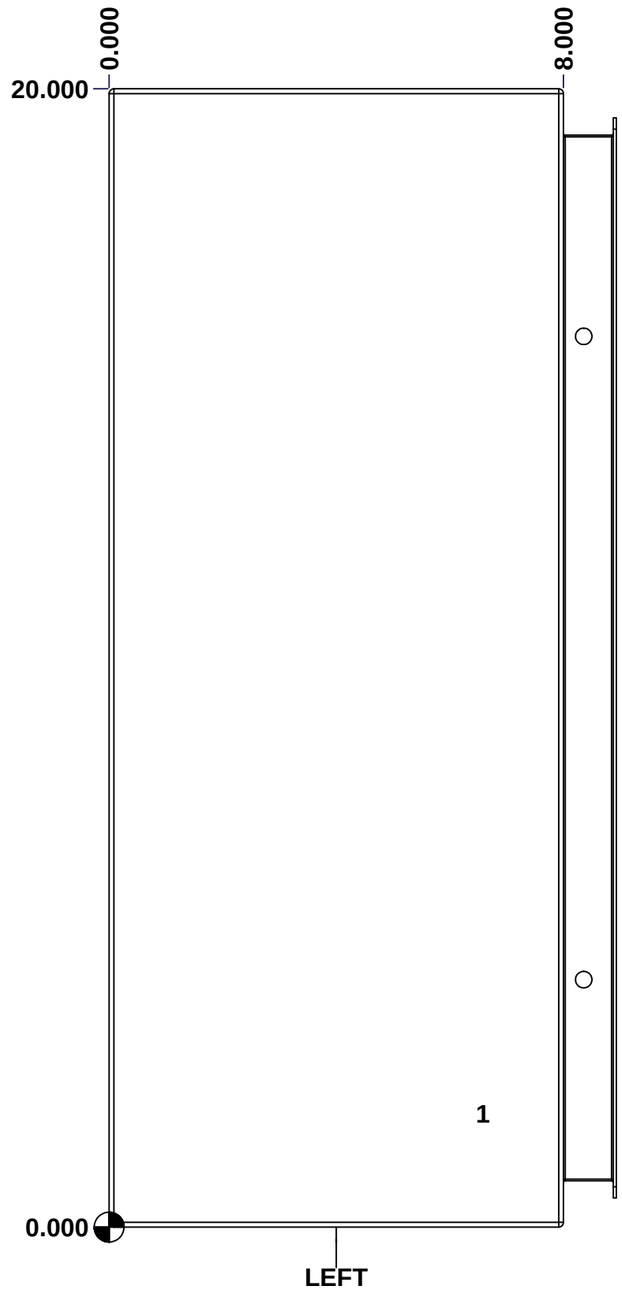

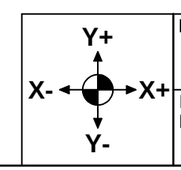

Description	Status
5412ESS 20" x 24" x 8" Body	

Part Number / Numéro Pièce	Rev.	
5412ESS2024086NOIPB	**0**	5 / 7

STANDARD FEATURES ARE NOT LISTED IN THIS HOLE TABLE

HOLE TABLE - BACK VIEW (CUSTOM FEATURE ONLY)

CUT-OUT	XDIM	YDIM	DESCRIPTION
1	1.875	1.875	IP STUD M8 x 35mm (Inside)
2	1.875	18.125	IP STUD M8 x 35mm (Inside)
3	22.125	18.125	IP STUD M8 x 35mm (Inside)
4	22.125	1.875	IP STUD M8 x 35mm (Inside)
---	---	---	---
5	23.250	0.750	RND Ø0.390
6	23.250	19.250	RND Ø0.390
7	0.750	19.250	RND Ø0.390
8	0.750	0.750	RND Ø0.390

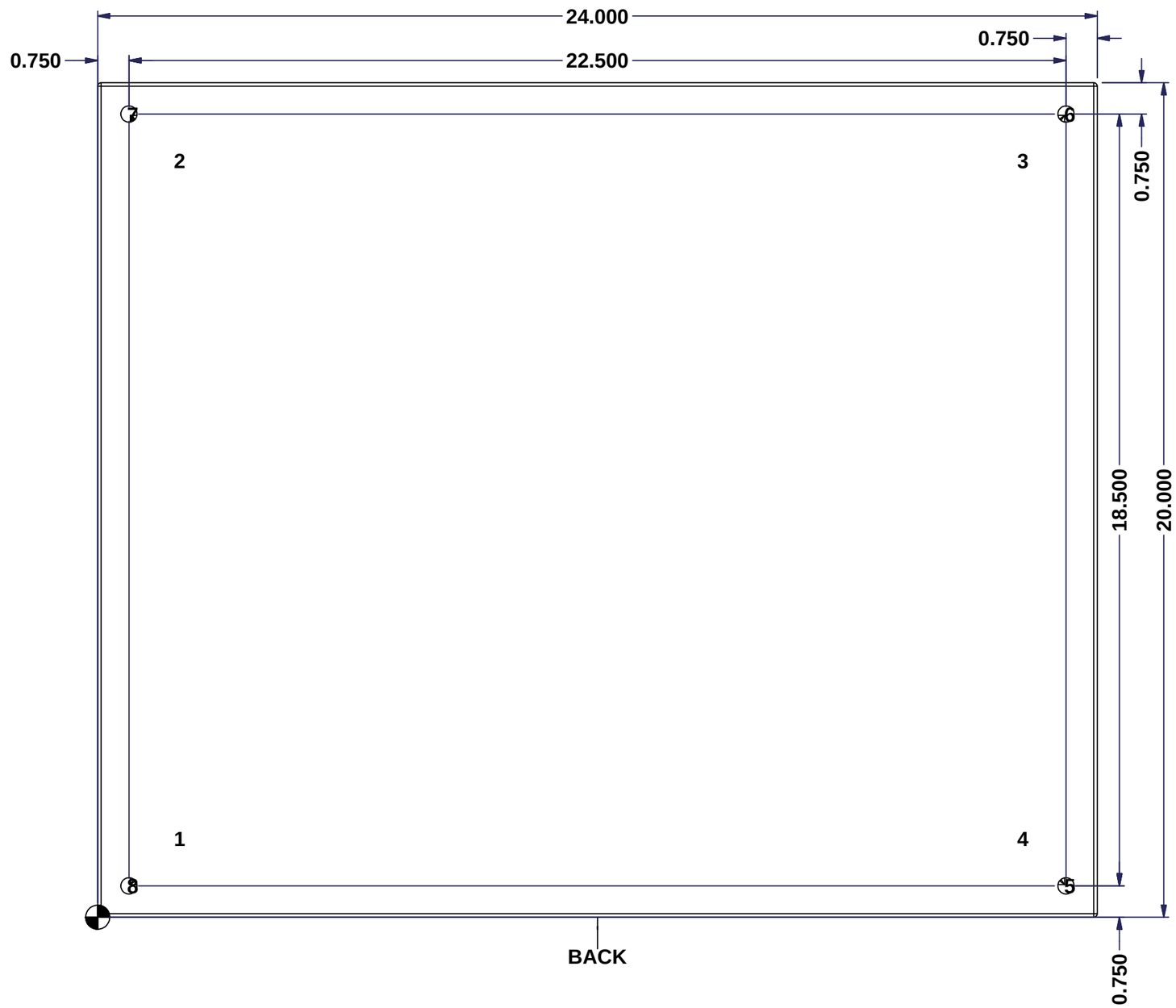

Y+ / X- X+ / Y-	Description 5412ESS 20" x 24" x 8" Body	Status
	Part Number Numéro Pièce **5412ESS2024086NOIPB**	Rev. **0**

No.	Revisions	Date	By/Par

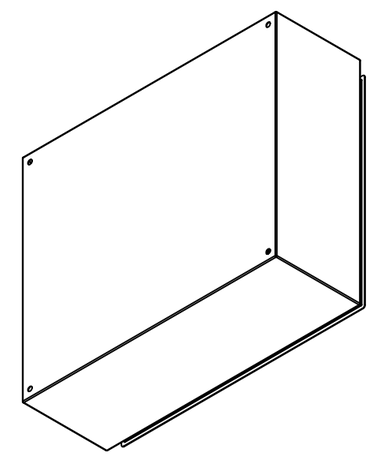

Isometric View

Tél: (450) 979-4373
Fax: (450) 979-4626
www.exmweb.com

Flatness
Aplatissement
Max 3.0mm

Projection

Customer Client		Date	
Drawn By Dessiné Par	BoxCad: BoxCad	Date	03-May-22
Material Matière	16 Ga Stainless Steel 316 (1.4mm)		
Color Couleur	Unpainted	Finish Fini	Brushed
Description	5412ESS 20" x 24" x 8" Body	Detail Rev.	
Part Number Numéro Pièce	**5412ESS2024086NOIPB**	Rev. **0**	7 / 7

Parts List

Qty	Part Number	Rev	Description
1	STK-Q-16085	0	Ground Stud M6 x 16mm Stainless Steel
4	STK-Q-16020	1	Stud M8 x 35mm Stainless Steel
1	5412ESS2024086NOIPB-P	0	5412ESS 20" x 24" x 8" Body Part

Tolerance ±1/32" unless otherwise specified

C:\Vault_Workspace\Inventor_Dwg\BoxCad\Result\5412ESS2024086NOIP\5412ESS2024086NOIPC.idw

Tolérance ±1/32" sauf spécification contraire

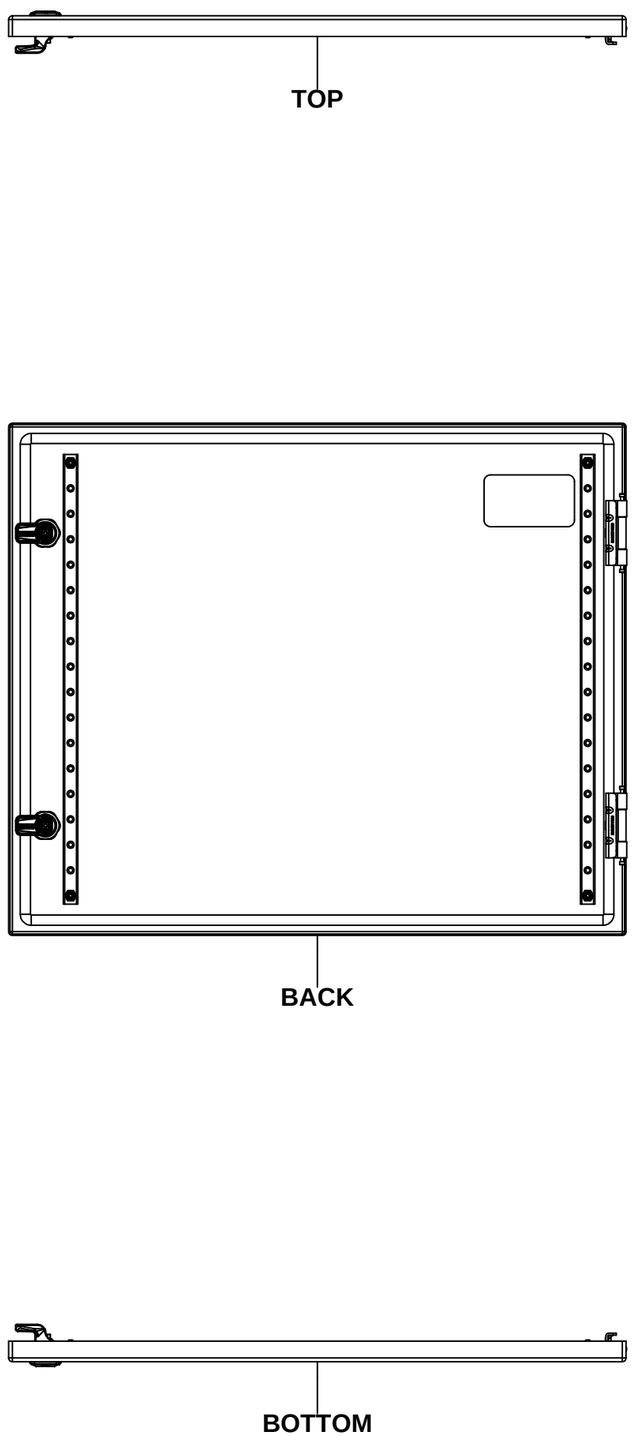

No.	Revisions	Date	By/Par

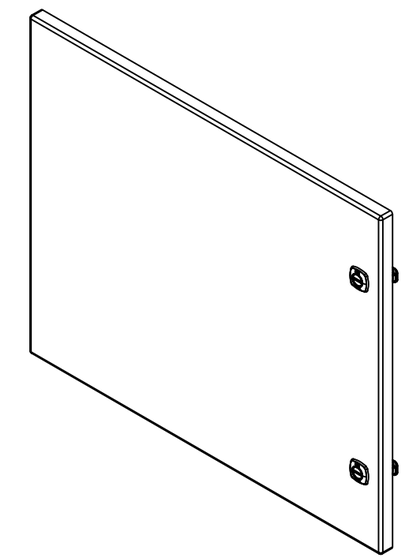

Isometric View

Tél: (450) 979-4373
Fax: (450) 979-4626
www.exmweb.com

Flatness / Aplatissement: Max 3.0mm

Projection

Customer / Client		Date	
Drawn By / Dessiné Par	BoxCad: BoxCad	Date	03-May-22
Material / Matière	16 Ga Stainless Steel 316 (1.4mm)		
Color / Couleur	Unpainted	Finish / Fini	Brushed
Description	5412ESS 20" x 24" Cover	Detail Rev.	
Part Number / Numéro Pièce	5412ESS2024086NOIPC	Rev.	0

1 / 3

SEE BILL OF MATERIAL ON LAST PAGE

STANDARD FEATURES ARE NOT LISTED IN THIS HOLE TABLE

HOLE TABLE - FRONT VIEW (CUSTOM FEATURE ONLY)

CUT-OUT	XDIM	YDIM	DESCRIPTION
1	1.486	1.535	STUD M6 x 18mm (Inside)
2	1.486	18.268	STUD M6 x 18mm (Inside)
3	21.517	18.268	STUD M6 x 18mm (Inside)
4	21.517	1.535	STUD M6 x 18mm (Inside)
---	---	---	---
5	3.750	16.803	LABEL_EXM (Inside)
6	22.494	15.553	LOCK 880 SCQ4-SLSS6 @ 0.0°
7	22.494	4.250	LOCK 880 SCQ4-SLSS6 @ 0.0°

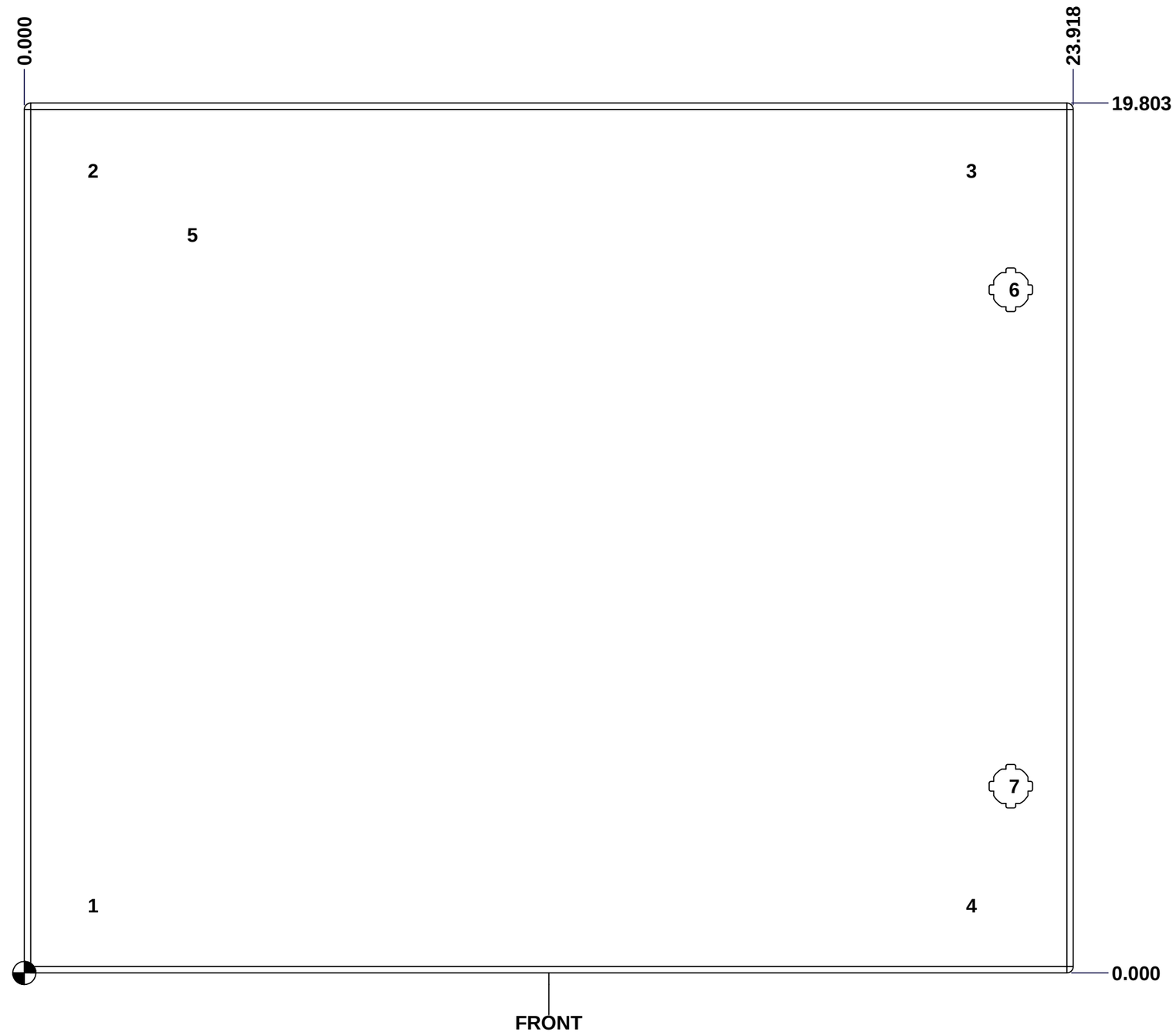

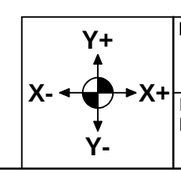

Description	Status
5412ESS 20" x 24" Cover	(NULL)

Part Number / Numéro Pièce	Rev.	
5412ESS2024086NOIPC	0	2 / 3

Tolerance ±1/32" unless otherwise specified

C:\Vault_Workspace\Inventor_Dwg\BoxCad\Result\5412ESS2024086NOIP\5412ESS2024086NOIPC.idw

Tolérance ±1/32" sauf spécification contraire

No.	Revisions	Date	By/Par

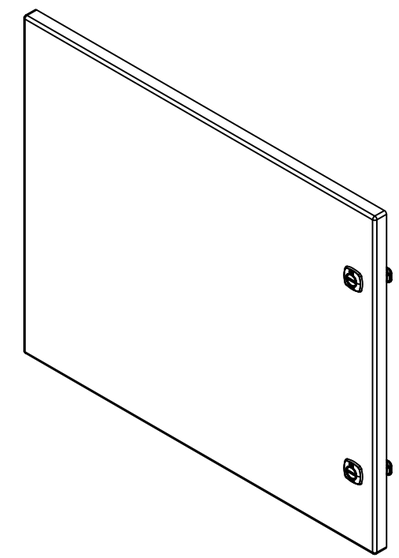

Isometric View

Qty	Part Name	Rev	Description
1	STK-S-00100	0	3.5" x 2" Silver Milar Flexcon Sticker
2	STK-Q-46020-20	5	5412 ES Vertical Door Stiffener 20"
4	STK-Q-16070	1	Stud M6 x 18mm Stainless steel
1	5412ESS2024086NOIPG	0	5412ESS 20" x 24" Cover Gasket Part
1	5412ESS2024086NOIPC-P	0	5412ESS 20" x 24" Cover Part
2	STK-A-33016	0	5412 ESS Bended Hinge (Body Part)
2	880 SCQ4-SLSS6	7	5412 ESS 1/4 Turn Lock
4	STK-Q-07220	1	M6 Nylon Insert Lock Nut

Parts List

Tél: (450) 979-4373
Fax: (450) 979-4626
www.exmweb.com

Flatness / Aplatissement: Max 3.0mm

Projection

Customer / Client

Date

Drawn By / Dessiné Par: BoxCad: BoxCad

Date: 03-May-22

Material / Matière: 16 Ga Stainless Steel 316 (1.4mm)

Color / Couleur: Unpainted

Finish / Fini: Brushed

Description: 5412ESS 20" x 24" Cover

Detail Rev.

Part Number / Numéro Pièce: **5412ESS2024086NOIPC**

Rev. **0**

3 / 3