This drawing is confidential and must not be reproduced or used without the consent of EXM

Ce dessin est confidentiel et ne doit pas être reproduit ou utilisé sans le consentement de EXM

No.	Revisions	Date	By/Par

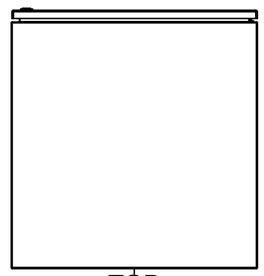

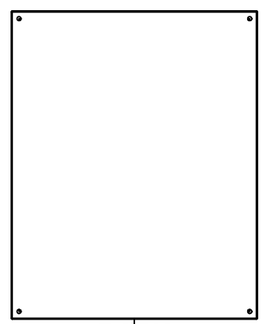

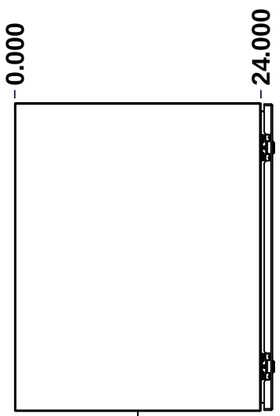

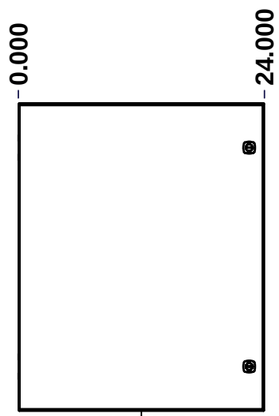

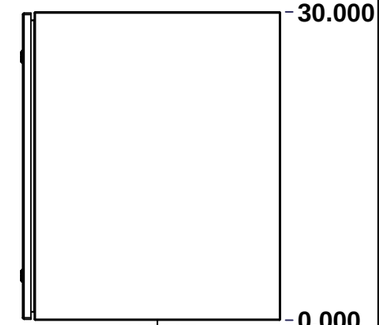

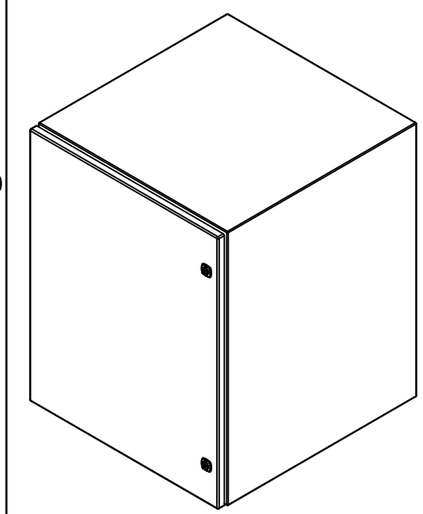

Isometric View

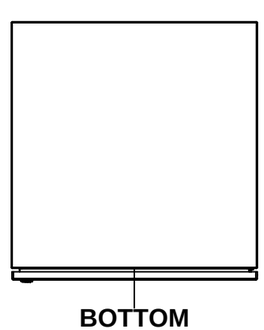

GRAIN DIRECTION:
TOP/BOTTOM: HORIZONTAL
LEFT/RIGHT/BACK/FRONT:VERTICAL

SEE BILL OF MATERIAL ON LAST PAGE

Tél: (450) 979-4373
Fax: (450) 979-4626
www.exmweb.com

Flatness / Aplatissement: Max 3.0mm

Projection

Customer / Client		Date	
Drawn By / Dessiné Par	BoxCad: BoxCad	Date	20-Oct-21
Material / Matière	14 Ga Stainless Steel 316 (1.7mm)		
Color / Couleur	Unpainted	Finish / Fini	Brushed
Description	5412ESS 30" x 24" x 24" Assembly	Detail Rev.	
Part Number / Numéro Pièce	**5412ESS3024246**	Rev.	**0**

1 / 2

This drawing is confidential and must not be reproduced or used without the consent of EXM

Ce dessin est confidentiel et ne doit pas être reproduit ou utilisé sans le consentement de EXM

NOTE

ITEM	DESCRIPTION
1	NEMA 4X Enclosure
2	C/W Standard ground studs on box and cover
3	C/W Standard door stiffener
4	C/W Standard inner panel (Included)
5	C/W Standard inner panel mounting studs

No.	Revisions	Date	By/Par

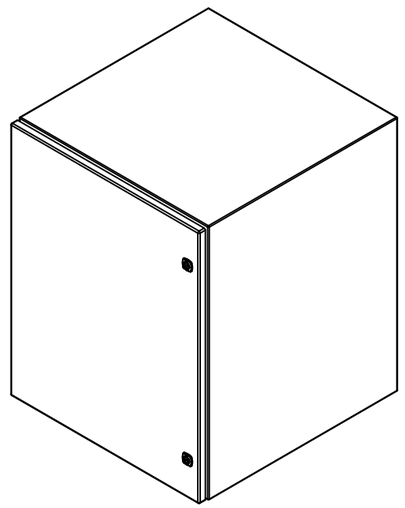

Isometric View

PACKING

ITEM	QTY	DESCRIPTION
Cardboard sleeve	2	Top and Bottom
Cardboard strip	2	Between back of enclosure and inner panel
Plastic bag	1	To protect cover surface and inside gasket
Plastic strap - Black	2	To Squeeze the 2 cardboard sleeve together
Packaging label	1	White label with product number

Parts List

Qty	Part Number	Rev	Description
1	STK-K-01800	5	5412 ES Accessory Kit
1	880 PP	6	Self Adhesive Print Pocket
1	881 SP3024G	0	881 SP - Inner Panel
1	5412ESS3024246C	0	5412ESS 30" x 24" Cover
4	STK-Q-07310	2	Flange Lock Nut M8
4	STK-Q-07610	8	M8 Plastic Spacer 22.2mm
1	5412ESS3024246B	0	5412ESS 30" x 24" x 24" Body
2	STK-Q-04051-07	8	M6 x 7mm Stainless Steel Hexagon Socket Head Machine Screw with Nyseal

Tél: (450) 979-4373
Fax: (450) 979-4626
www.exmweb.com

Flatness / Aplatissement: Max 3.0mm

Projection

Customer / Client		Date	
Drawn By / Dessiné Par	BoxCad: BoxCad	Date	20-Oct-21
Material / Matière	14 Ga Stainless Steel 316 (1.7mm)		
Color / Couleur	Unpainted	Finish / Fini	Brushed
Description	5412ESS 30" x 24" x 24" Assembly	Detail Rev.	
Part Number / Numéro Pièce	**5412ESS3024246**	Rev. **0**	2 / 2

This drawing is confidential and must not be reproduced or used without the consent of EXM

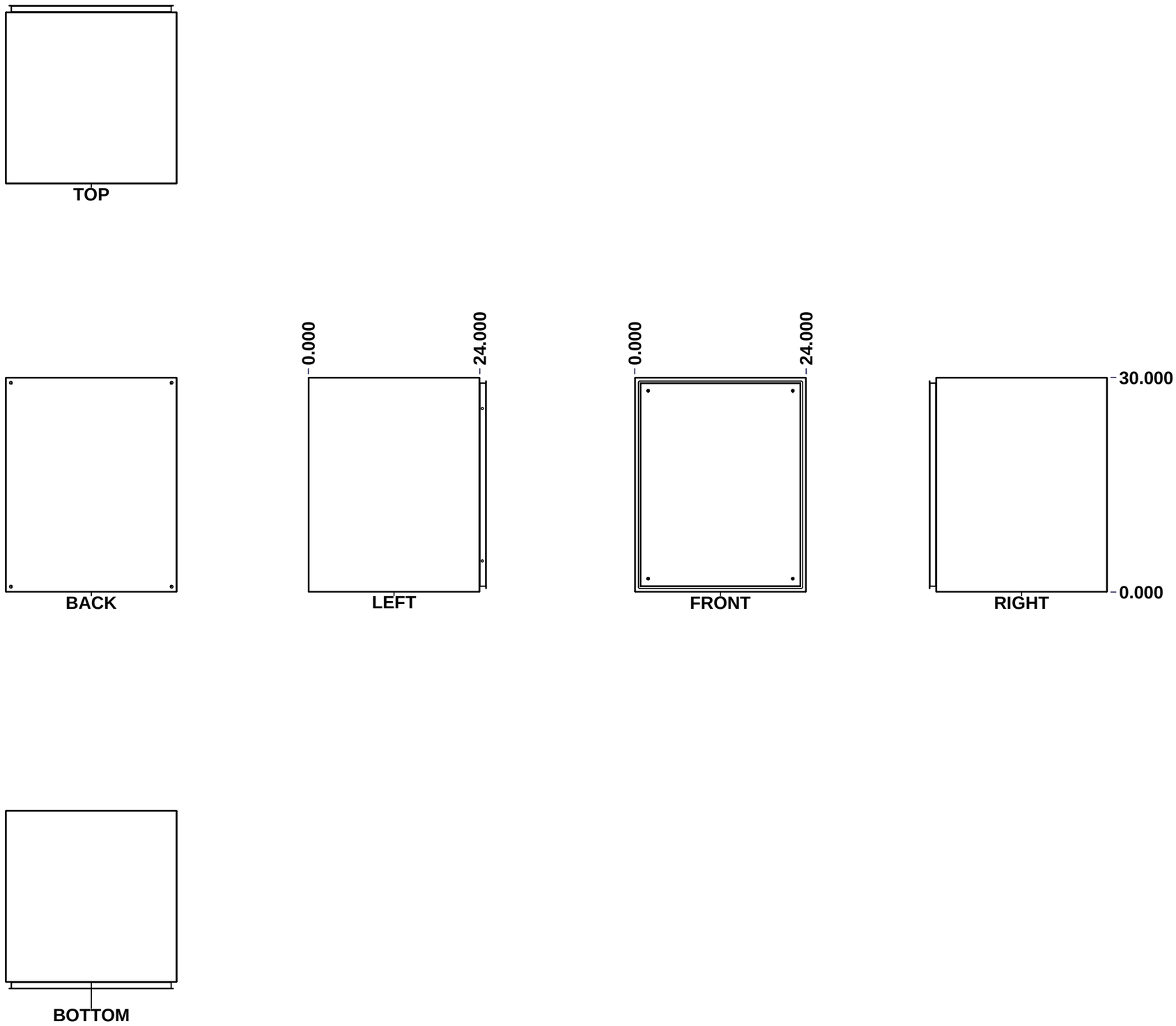

SEE BILL OF MATERIAL ON LAST PAGE

No.	Revisions	Date	By/Par

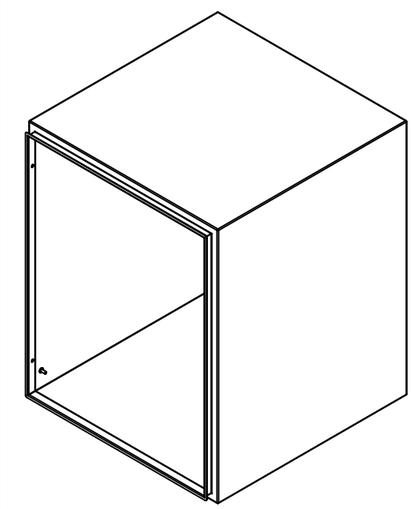

Isometric View

Ce dessin est confidentiel et ne doit pas être reproduit ou utilisé sans le consentement de EXM

Tél: (450) 979-4373
Fax: (450) 979-4626
www.exmweb.com

Flatness / Aplatissement: Max 3.0mm

Projection

Customer / Client		Date	
Drawn By / Dessiné Par	BoxCad: BoxCad	Date	20-Oct-21
Material / Matière	14 Ga Stainless Steel 316 (1.7mm)		
Color / Couleur	Unpainted	Finish / Fini	Brushed
Description	5412ESS 30" x 24" x 24" Body	Detail Rev.	
Part Number / Numéro Pièce	**5412ESS3024246B**	Rev.	**0**

This drawing is confidential and must not be reproduced or used without the consent of EXM

Ce dessin est confidentiel et ne doit pas être reproduit ou utilisé sans le consentement de EXM

STANDARD FEATURES ARE NOT LISTED IN THIS HOLE TABLE

HOLE TABLE - LEFT VIEW (CUSTOM FEATURE ONLY)

CUT-OUT	XDIM	YDIM	DESCRIPTION
1	22.500	2.000	GND STUD M6 x 16mm (Inside)

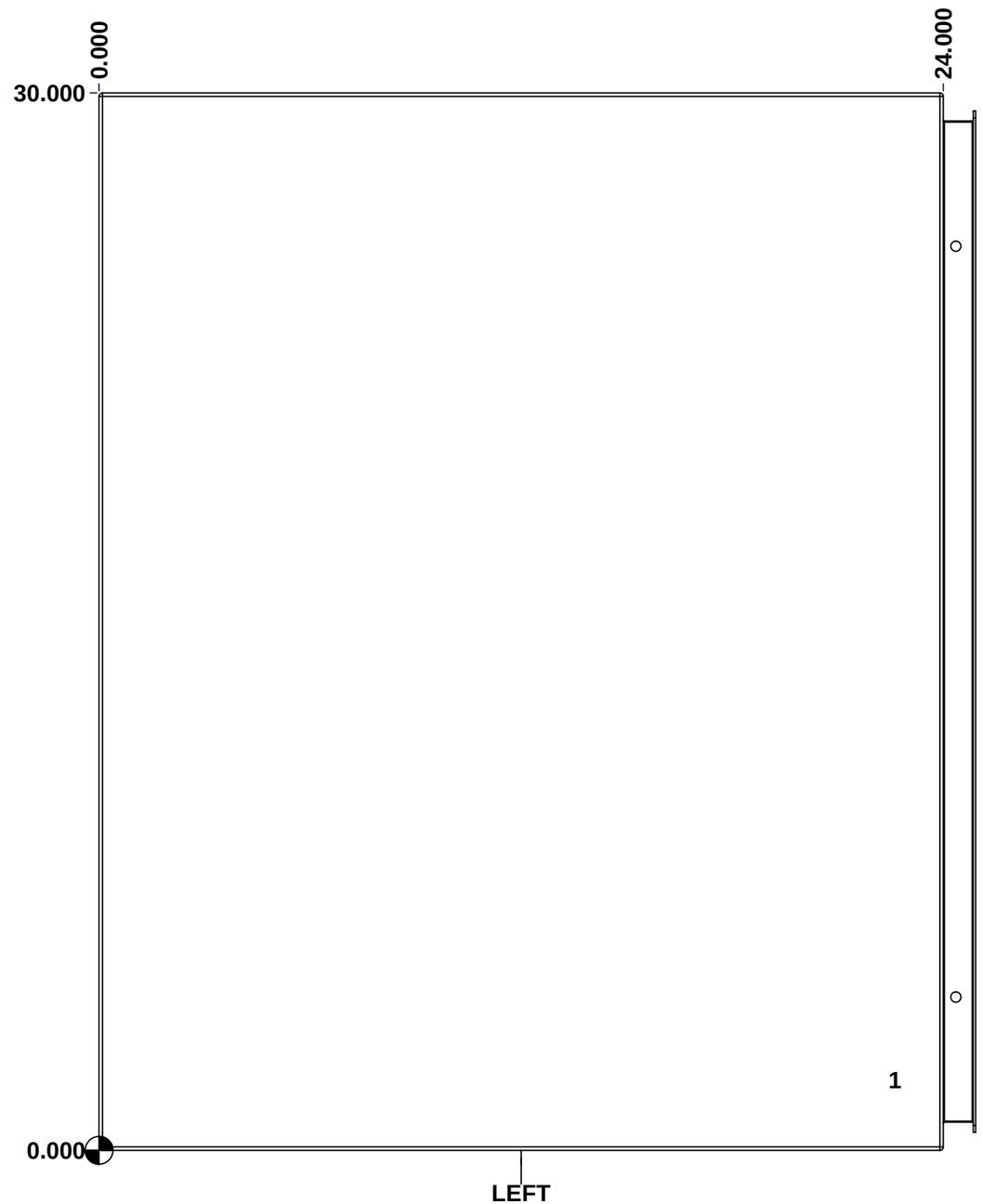

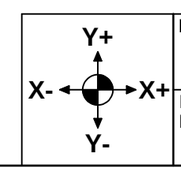

Description	Status
5412ESS 30" x 24" x 24" Body	
Part Number / Numéro Pièce: **5412ESS3024246B**	Rev. **0**

This drawing is confidential and must not be reproduced or used without the consent of EXM

STANDARD FEATURES ARE NOT LISTED IN THIS HOLE TABLE

HOLE TABLE - BACK VIEW (CUSTOM FEATURE ONLY)

CUT-OUT	XDIM	YDIM	DESCRIPTION
1	1.875	1.875	IP STUD M8 x 35mm (Inside)
2	1.875	28.125	IP STUD M8 x 35mm (Inside)
3	22.125	28.125	IP STUD M8 x 35mm (Inside)
4	22.125	1.875	IP STUD M8 x 35mm (Inside)
---	---	---	---
5	23.250	0.750	RND Ø0.390
6	23.250	29.250	RND Ø0.390
7	0.750	29.250	RND Ø0.390
8	0.750	0.750	RND Ø0.390

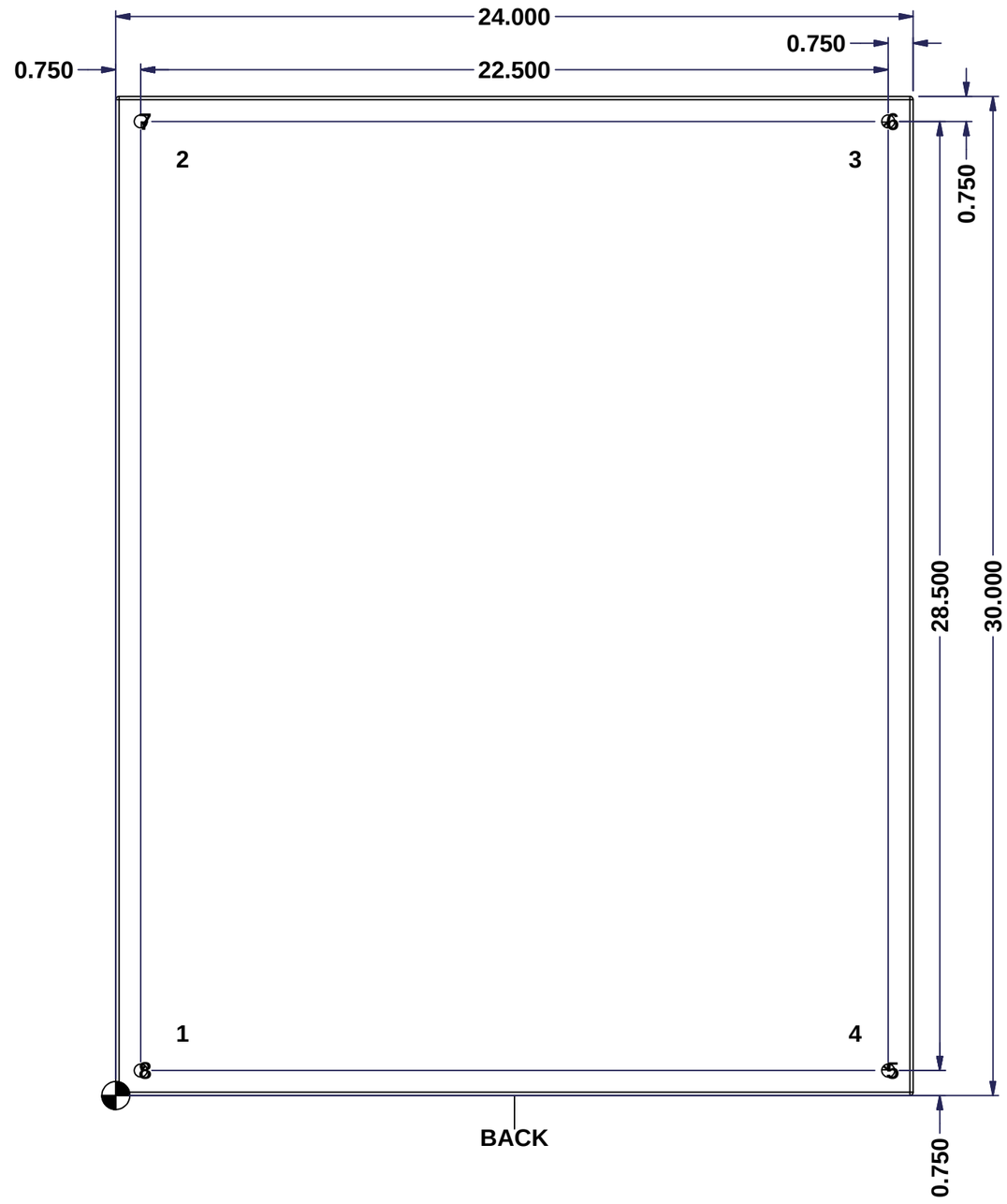

Ce dessin est confidentiel et ne doit pas être reproduit ou utilisé sans le consentement de EXM

Y+
X- X+
Y-

Description	Status
5412ESS 30" x 24" x 24" Body	
Part Number / Numéro Pièce: **5412ESS3024246B**	Rev. **0**

Tolerance ±1/32" unless otherwise specified

C:\Vault_Workspace\Inventor_Dwg\BoxCad\Result\5412ESS3024246\5412ESS3024246B.idw

Tolérance ±1/32" sauf spécification contraire

This drawing is confidential and must not be reproduced or used without the consent of EXM

Ce dessin est confidentiel et ne doit pas être reproduit ou utilisé sans le consentement de EXM

No.	Revisions	Date	By/Par

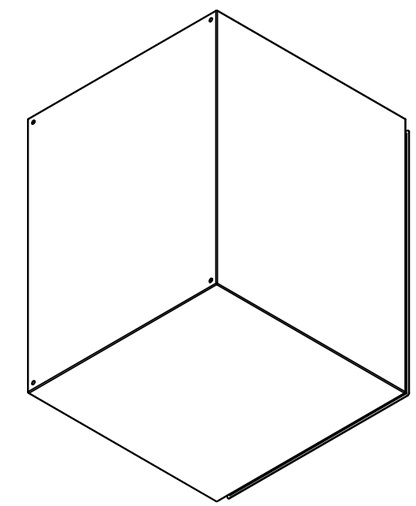

Isometric View

Tél: (450) 979-4373
Fax: (450) 979-4626
www.exmweb.com

Flatness
Aplatissement
Max 3.0mm

Projection

Customer Client		Date	
Drawn By Dessiné Par	BoxCad: BoxCad	Date	20-Oct-21
Material Matière	14 Ga Stainless Steel 316 (1.7mm)		
Color Couleur	Unpainted	Finish Fini	Brushed
Description	5412ESS 30" x 24" x 24" Body	Detail Rev.	
Part Number Numéro Pièce	**5412ESS3024246B**	Rev. **0**	7 / 7

Qty	Part Number	Rev	Description
1	STK-Q-16085	0	Ground Stud M6 x 16mm Stainless Steel
4	STK-Q-16020	1	Stud M8 x 35mm Stainless Steel
1	5412ESS3024246B-P	0	5412ESS 30" x 24" x 24" Body Part

Parts List

This drawing is confidential and must not be reproduced or used without the consent of EXM

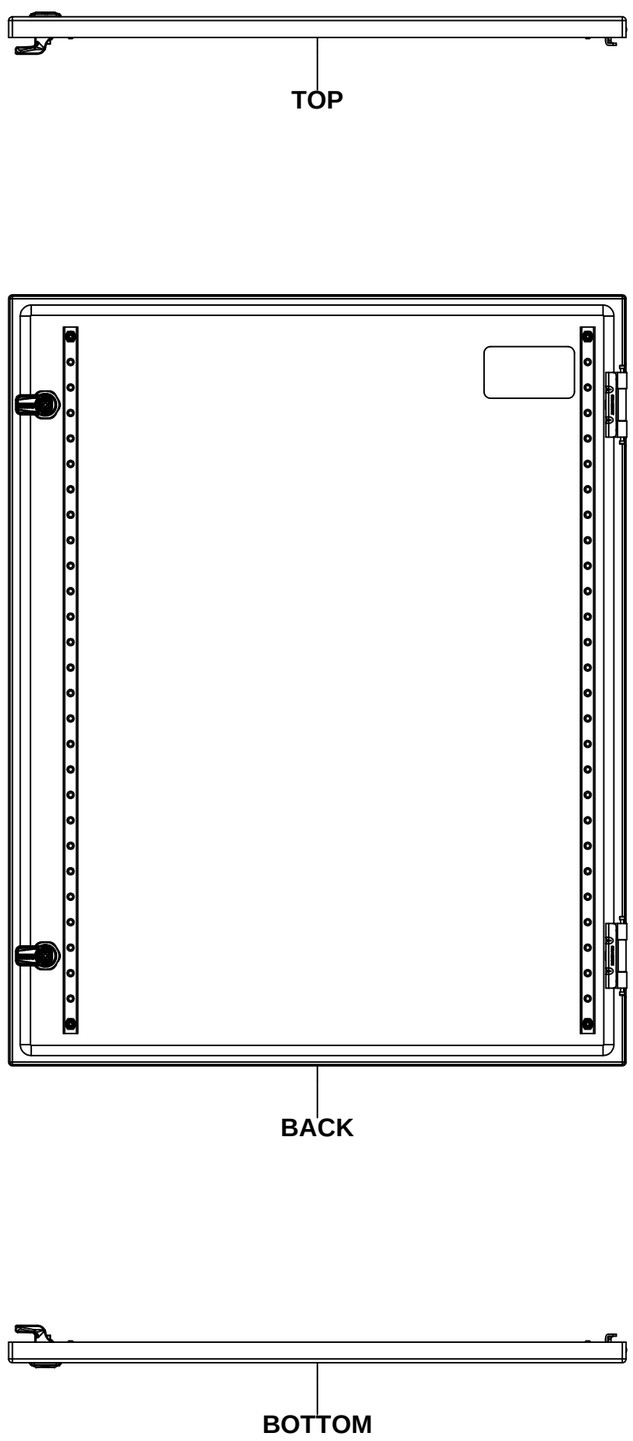

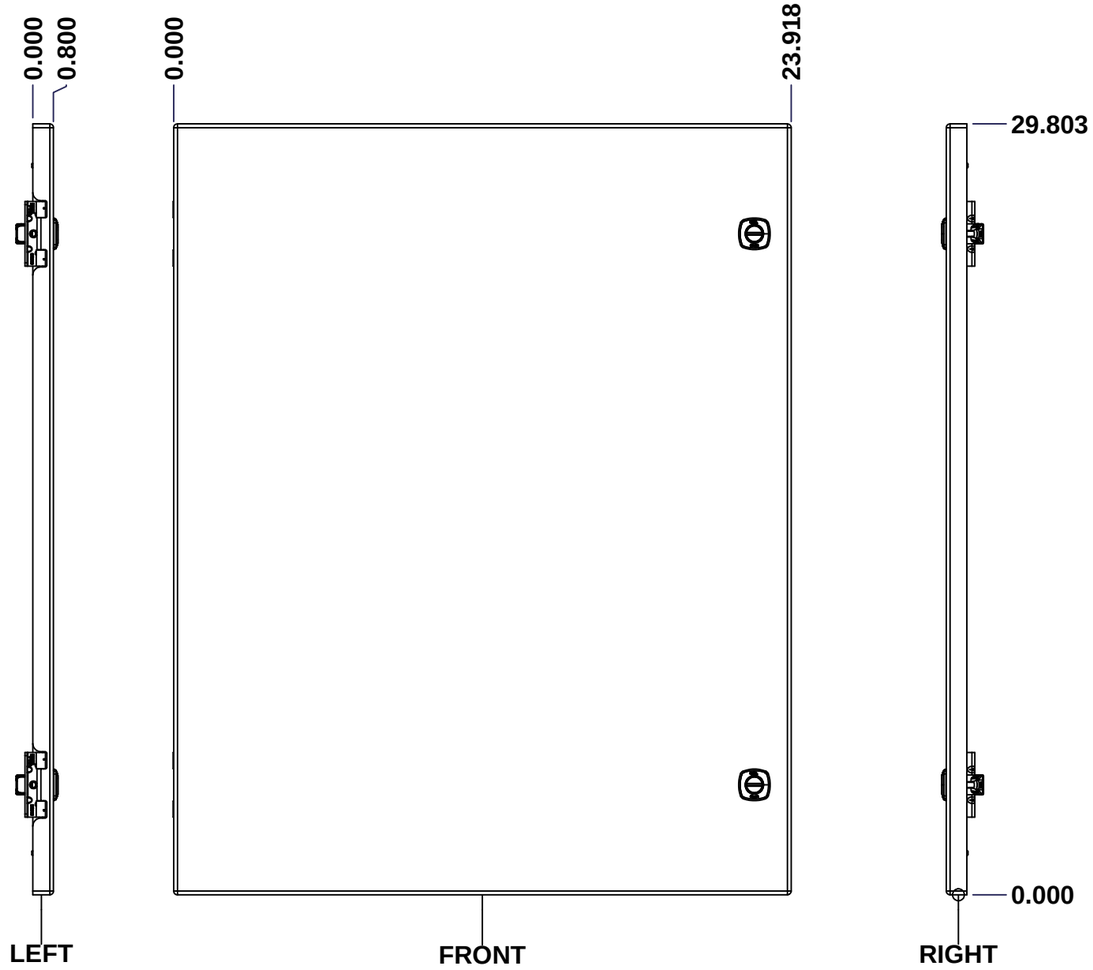

SEE BILL OF MATERIAL ON LAST PAGE

No.	Revisions	Date	By/Par

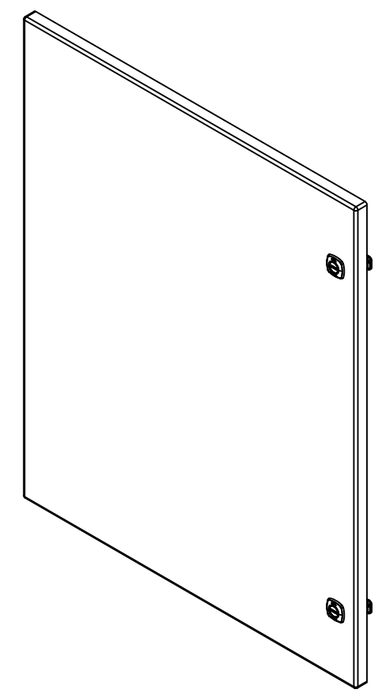

Isometric View

Ce dessin est confidentiel et ne doit pas être reproduit ou utilisé sans le consentement de EXM

Tél: (450) 979-4373
Fax: (450) 979-4626
www.exmweb.com

Flatness / Aplatissement: Max 3.0mm

Projection

Customer / Client		Date	
Drawn By / Dessiné Par	BoxCad: BoxCad	Date	20-Oct-21
Material / Matière	16 Ga Stainless Steel 316 (1.4mm)		
Color / Couleur	Unpainted	Finish / Fini	Brushed
Description	5412ESS 30" x 24" Cover	Detail Rev.	
Part Number / Numéro Pièce	5412ESS3024246C	Rev.	0

This drawing is confidential and must not be reproduced or used without the consent of EXM

Ce dessin est confidentiel et ne doit pas être reproduit ou utilisé sans le consentement de EXM

STANDARD FEATURES ARE NOT LISTED IN THIS HOLE TABLE

HOLE TABLE - FRONT VIEW (CUSTOM FEATURE ONLY)

CUT-OUT	XDIM	YDIM	DESCRIPTION
1	1.486	1.614	STUD M6 x 18mm (Inside)
2	1.486	28.189	STUD M6 x 18mm (Inside)
3	21.517	28.189	STUD M6 x 18mm (Inside)
4	21.517	1.614	STUD M6 x 18mm (Inside)
---	---	---	---
5	3.750	26.803	LABEL_EXM (Inside)
6	22.494	25.553	LOCK 880 SCQ4-SLSS6 @ 0.0°
7	22.494	4.250	LOCK 880 SCQ4-SLSS6 @ 0.0°

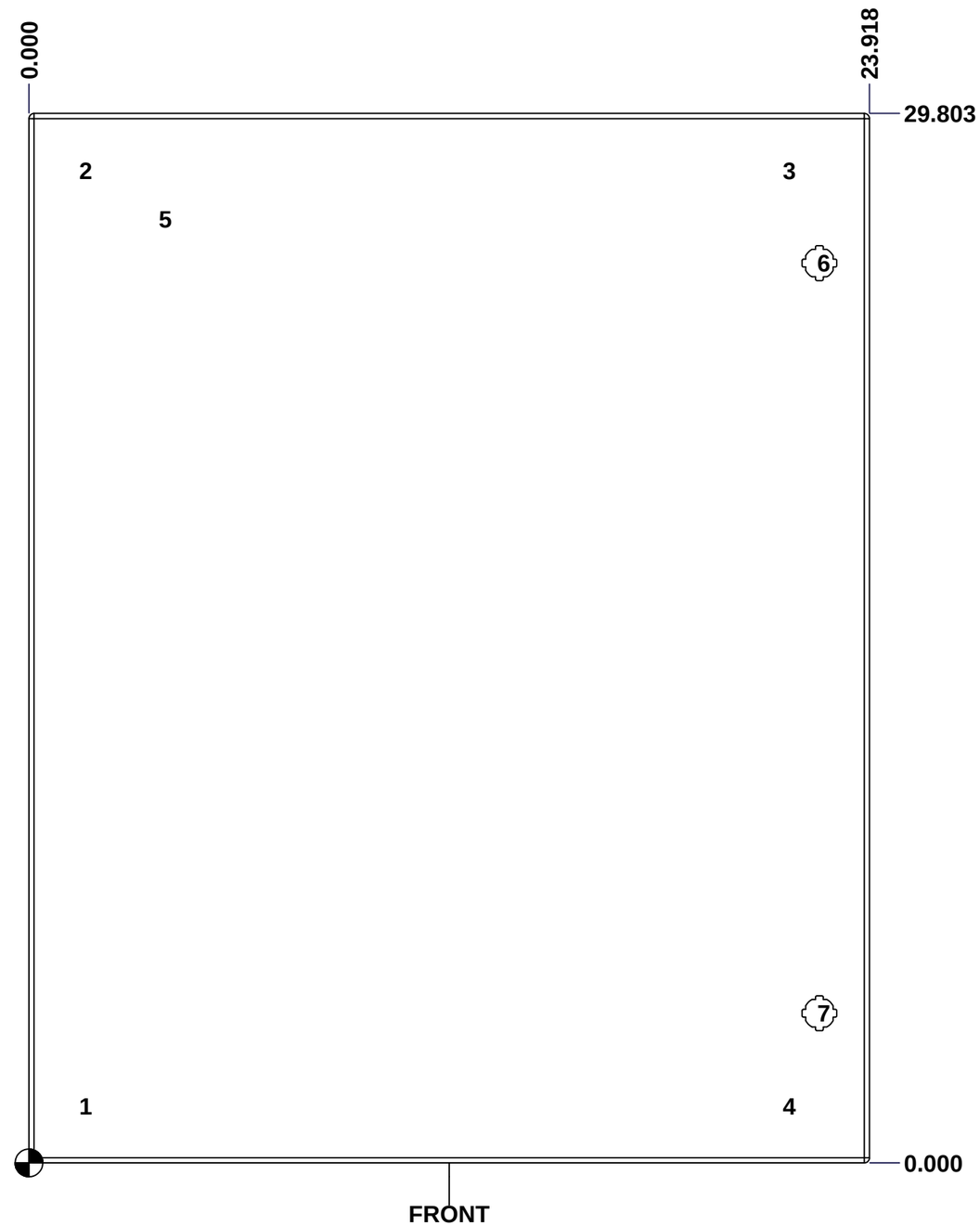

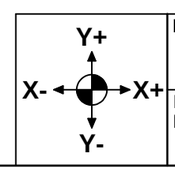

Description	Status
5412ESS 30" x 24" Cover	(NULL)

Part Number / Numéro Pièce	Rev.	
5412ESS3024246C	0	2 / 3

Tolerance ±1/32" unless otherwise specified

C:\Vault_Workspace\Inventor_Dwg\BoxCad\Result\5412ESS3024246\5412ESS3024246C.idw

Tolérance ±1/32" sauf spécification contraire

This drawing is confidential and must not be reproduced or used without the consent of EXM

Ce dessin est confidentiel et ne doit pas être reproduit ou utilisé sans le consentement de EXM

No.	Revisions	Date	By/Par

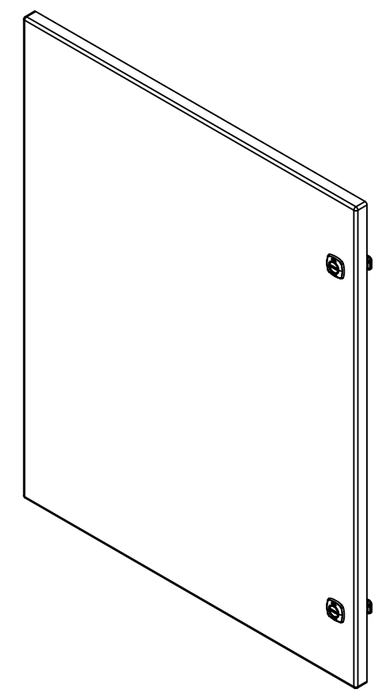

Isometric View

Tél: (450) 979-4373
Fax: (450) 979-4626
www.exmweb.com

Flatness
Aplatissement
Max 3.0mm

Projection

Customer
Client

Date

Drawn By
Dessiné Par
BoxCad: BoxCad

Date
20-Oct-21

Material
Matière
16 Ga Stainless Steel 316 (1.4mm)

Color
Couleur
Unpainted

Finish
Fini
Brushed

Description
5412ESS 30" x 24" Cover

Detail Rev.

Part Number
Numéro Pièce
5412ESS3024246C

Rev.
0

3 / 3

Qty	Part Name	Rev	Description
1	STK-S-00100	0	3.5" x 2" Silver Milar Flexcon Sticker
2	STK-Q-46020-30	5	5412 ES Vertical Door Stiffener 30"
4	STK-Q-16070	1	Stud M6 x 18mm Stainless steel
1	5412ESS3024246G	0	5412ESS 30" x 24" Cover Gasket Part
1	5412ESS3024246C-P	0	5412ESS 30" x 24" Cover Part
2	STK-A-33016	0	5412 ESS Bended Hinge (Body Part)
2	880 SCQ4-SLSS6	7	5412 ESS 1/4 Turn Lock
4	STK-Q-07220	1	M6 Nylon Insert Lock Nut

Parts List

This drawing is confidential and must not be reproduced or used without the consent of EXM

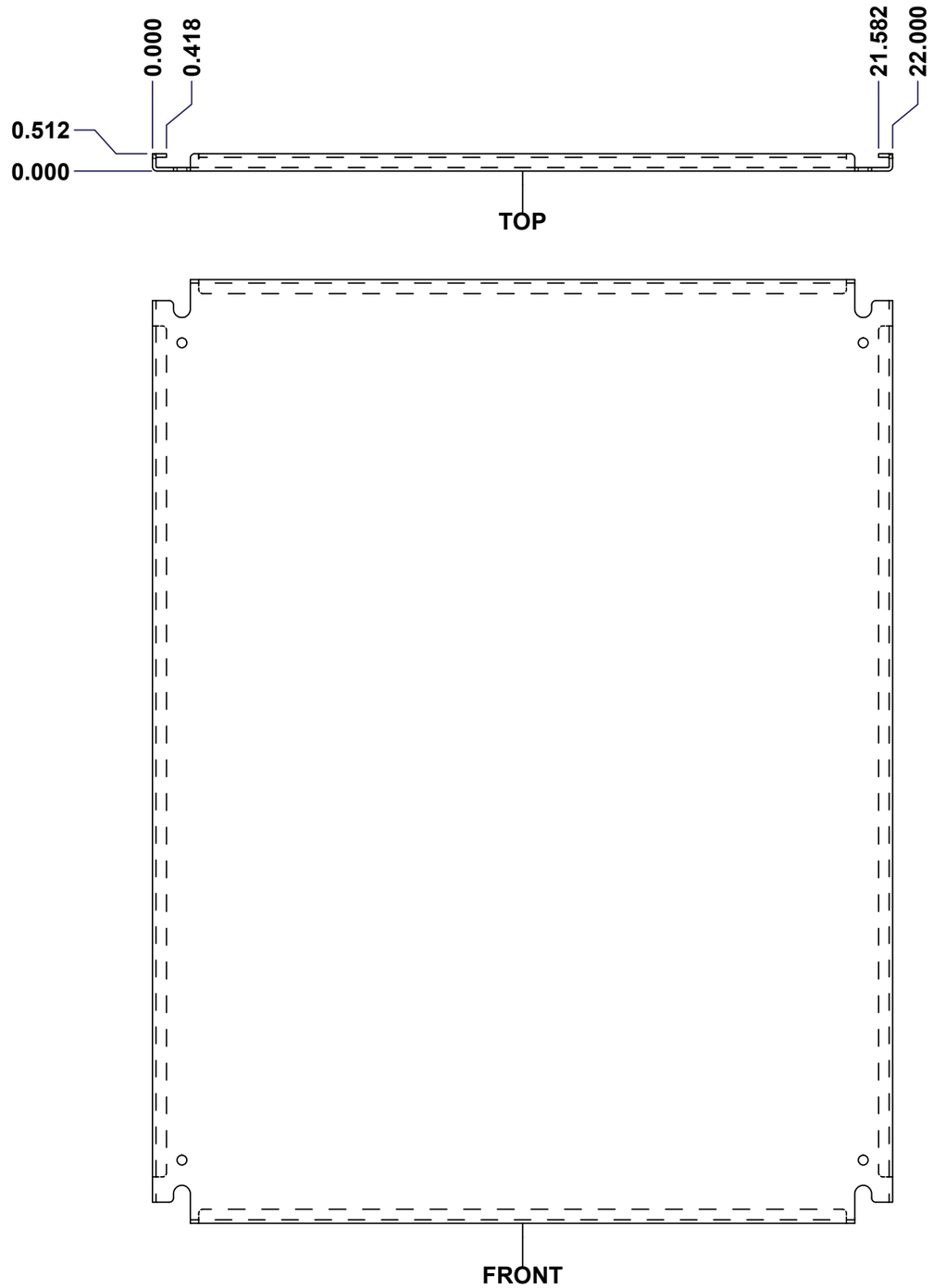

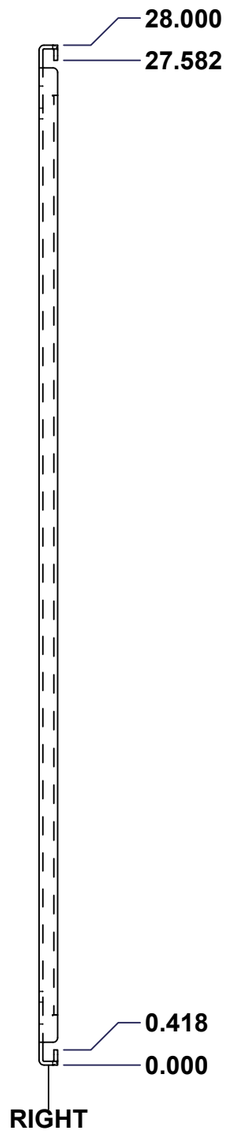

No.	Revisions	Date	By/Par

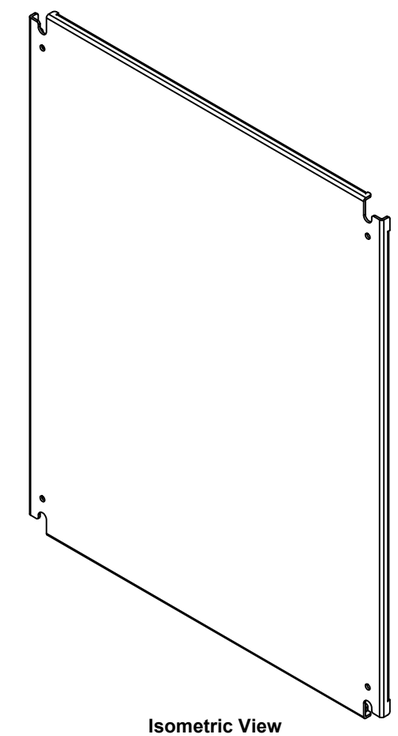

Isometric View

Ce dessin est confidentiel et ne doit pas être reproduit ou utilisé sans le consentement de EXM

Tél: (450) 979-4373
Fax: (450) 979-4626
www.exmweb.com

Flatness / Aplatissement: Max 3.0mm

Projection

Customer / Client		Date	
Drawn By / Dessiné Par	BoxCad	Date	1/23/2007
Material / Matière	See Part List		
Color / Couleur	See Part List	Finish / Fini	See Part List
Description	881 SP - Inner Panel	Detail Rev.	
Part Number / Numéro Pièce	**881 SP3024G**	Rev. **0**	1 / 2

Qty	Part Number	Rev	Description	Material	Color	Finish
1	881 SP3024G-P	0	881 SP - Inner Panel Part	12 Ga Galvanized	Unpainted	Galvanized

Parts List

Tolerance ±1/32" unless otherwise specified

C:\Vault_Workspace\Inventor_Dwg\Inv-8\881SP\881SP3024G.idw

Tolérance ±1/32" sauf spécification contraire

This drawing is confidential and must not be reproduced or used without the consent of EXM

Ce dessin est confidentiel et ne doit pas être reproduit ou utilisé sans le consentement de EXM

Table 1

CUT-OUT	XDIM	YDIM	DESCRIPTION
1	0.875	1.875	GROUND HOLE (RND Ø0.290)
2	21.125	1.875	GROUND HOLE (RND Ø0.290)
3	0.875	26.125	GROUND HOLE (RND Ø0.290)
4	21.125	26.125	GROUND HOLE (RND Ø0.290)

FRONT VIEW

All knockouts are actual size / Les disques défonçables sont grandeur réel

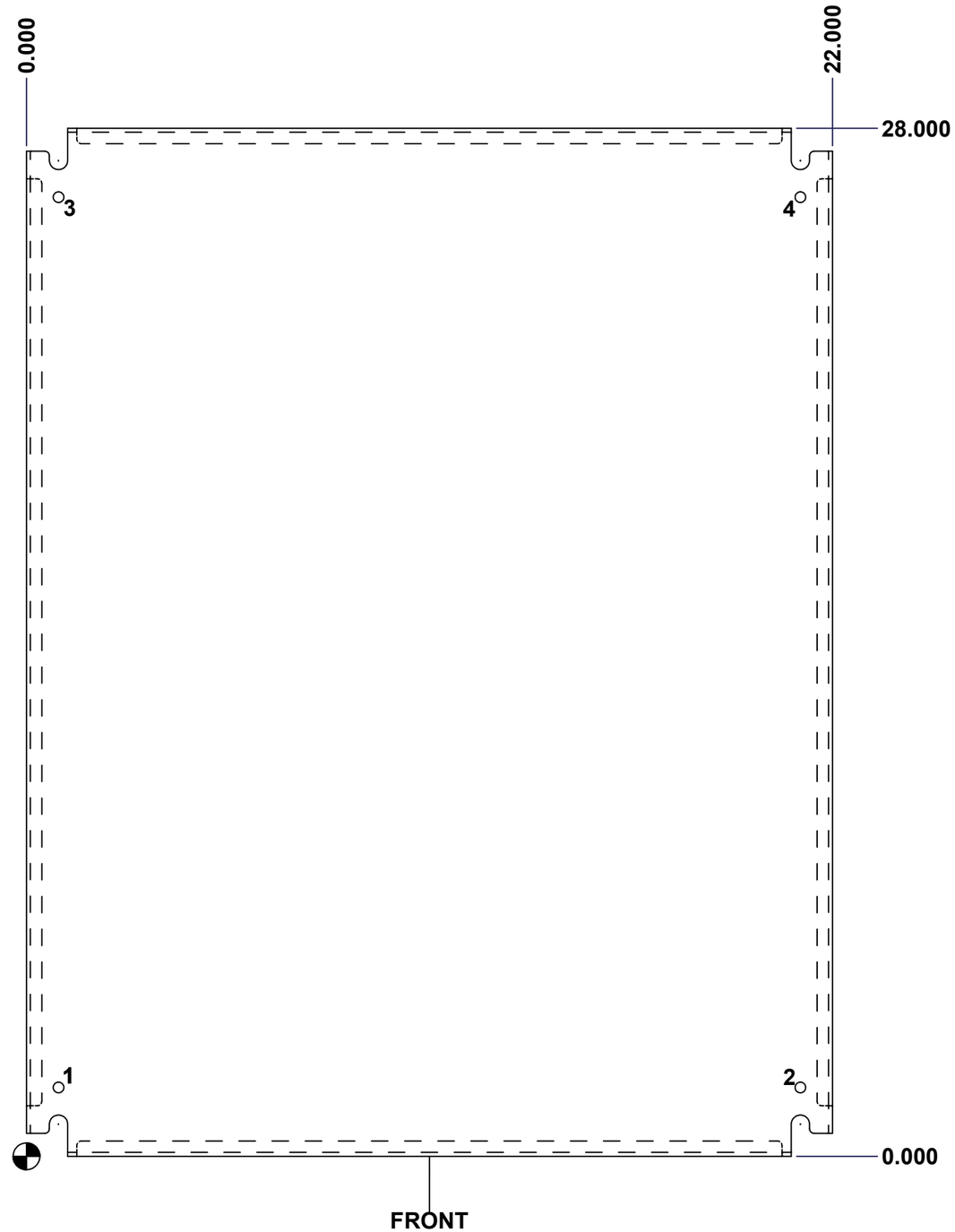

No.	Revisions	Date	By/Par

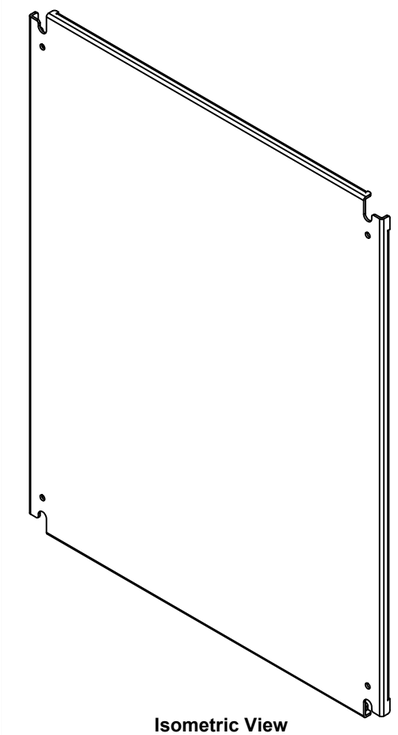

Isometric View

Tél: (450) 979-4373
Fax: (450) 979-4626
www.exmweb.com

Flatness / Aplatissement: Max 3.0mm

Projection

Customer / Client	
Date	
Drawn By / Dessiné Par	BoxCad
Date	1/23/2007
Material / Matière	See Part List
Color / Couleur	See Part List
Finish / Fini	See Part List
Description	881 SP - Inner Panel
Detail Rev.	
Part Number / Numéro Pièce	**881 SP3024G**
Rev.	**0**
Sheet	2 / 2