This drawing is confidential and must not be reproduced or used without the consent of EXM

Tolerance ±1/32" unless otherwise specified

C:\Vault_Workspace\Inventor_Dwg\BoxCad\Result\5412ESSCH1212056\5412ESSCH1212056.idw

Tolérance ±1/32" sauf spécification contraire

Ce dessin est confidentiel et ne doit pas être reproduit ou utilisé sans le consentement de EXM

| No. | Revisions | Date | By/Par |
|---|---|---|---|
| | | | |
| | | | |
| | | | |
| | | | |
| | | | |

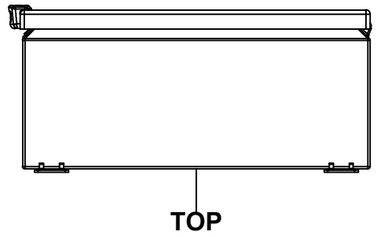


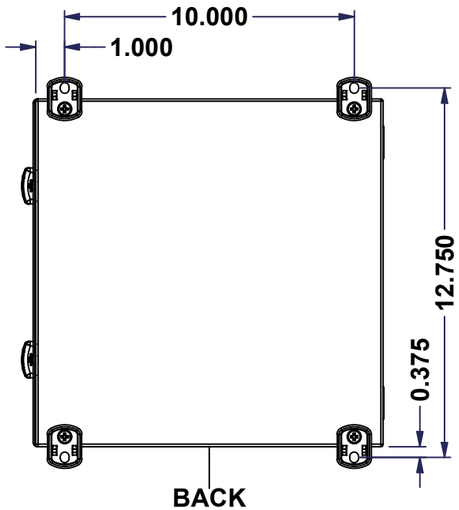


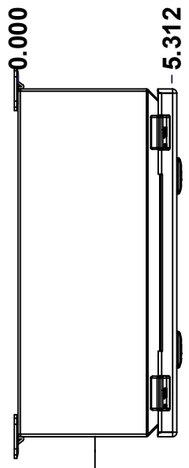


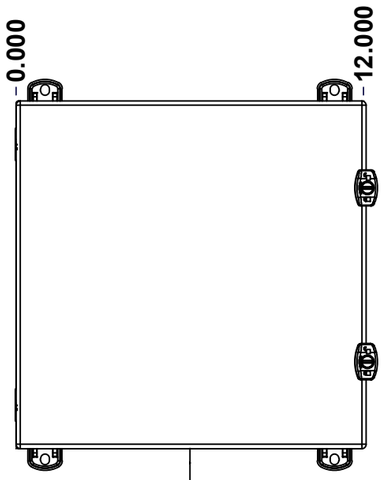


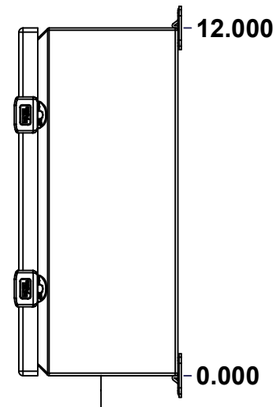


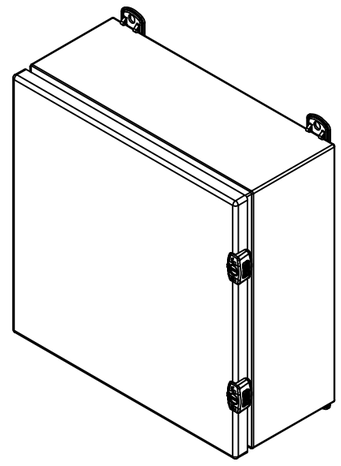

Isometric View

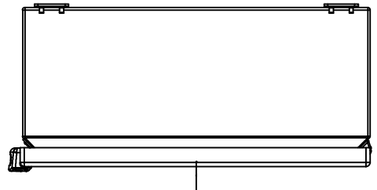


**GRAIN DIRECTION:**
**TOP/BOTTOM: HORIZONTAL**
**LEFT/RIGHT/BACK/FRONT:VERTICAL**

SEE BILL OF MATERIAL ON LAST PAGE

EXM exm
Tél: (450) 979-4373
Fax: (450) 979-4626
www.exmweb.com

Flatness / Aplatissement: Max 3.0mm

Projection

| | | | |
|---|---|---|---|
| Customer / Client | | | Date |
| Drawn By / Dessiné Par | BoxCad: BoxCad | Date | 25-Jul-23 |
| Material / Matière | 16 Ga Stainless Steel 304 (1.4mm) | | |
| Color / Couleur | Unpainted | Finish / Fini | Brushed |
| Description | 5412ESSCH 12" x 12" x 5" Assembly | Detail Rev. | |
| Part Number / Numéro Pièce | **5412ESSCH1212056** | Rev. | **0** |

This drawing is confidential and must not be reproduced or used without the consent of EXM

Tolerance ±1/32" unless otherwise specified

C:\Vault_Workspace\Inventor_Dwg\BoxCad\Result\5412ESSCH1212056\5412ESSCH1212056.idw

Tolérance ±1/32" sauf spécification contraire

Ce dessin est confidentiel et ne doit pas être reproduit ou utilisé sans le consentement de EXM

| NOTE | |
|---|---|
| **ITEM** | **DESCRIPTION** |
| 1 | NEMA 4X Enclosure |
| 2 | C/W Standard ground standoffs on box and cover |
| 3 | W/O Standard door stiffener |
| 4 | C/W Standard inner panel (Sold separately) |
| 5 | C/W Standard inner panel mounting standoffs |
| 6 | C/W 885 ESCHMF2 Mounting Feet (Installed) |

| No. | Revisions | Date | By/Par |
|---|---|---|---|
| | | | |
| | | | |
| | | | |
| | | | |
| | | | |

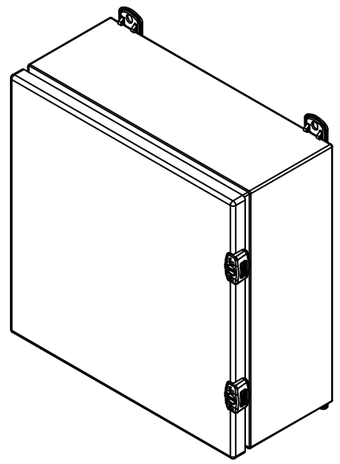

**Isometric View**

Tél: (450) 979-4373
Fax: (450) 979-4626
www.exmweb.com

Flatness
Aplatissement
Max 3.0mm

Projection

| | | | |
|---|---|---|---|
| Customer<br>Client | | | Date |
| Drawn By<br>Dessiné Par | BoxCad: BoxCad | Date | 25-Jul-23 |
| Material<br>Matière | 16 Ga Stainless Steel 304 (1.4mm) | | |
| Color<br>Couleur | Unpainted | Finish<br>Fini | Brushed |
| Description<br>5412ESSCH 12" x 12" x 5" Assembly | | Detail Rev. | |
| Part Number<br>Numéro Pièce<br>**5412ESSCH1212056** | | Rev.<br>**0** | 2<br>9 |

| PACKING | | |
|---|---|---|
| **ITEM** | **QTY** | **DESCRIPTION** |
| STK-E-04318 | 1 | CARTON 5412 ESCH121205 |
| Plastic bag | 1 | To protect cover surface and inside gasket |
| Packaging label | 1 | White label with product number |
| STK-S-01100 | 1 | ESCH EXM SQUARE STICKER |

| Qty | Part Number | Rev | Description |
|---|---|---|---|
| 1 | 5412ESSCH1212056C | 0 | 5412ESSCH 12" x 12" Cover |
| 1 | 885 ESSCHMFQ | 0 | 5412 ESSCH Mounting Feet Accessory Kit |
| 1 | 880 SP1212G | 0 | 880 SP1212G - Inner Panel |
| 1 | STK-K-02910 | 3 | 5412 ESCH Accessory Kit |
| 1 | 5412ESSCH1212056B | 0 | 5412ESSCH 12" x 12" x 5" Body |
| 2 | STK-Q-08100 | 1 | M5 Nylon Insert Lock Nut |
| 2 | STK-Q-10249 | 0 | M5 Sealing Washer |

Parts List

This drawing is confidential and must not be reproduced or used without the consent of EXM

Tolerance ±1/32" unless otherwise specified

C:\Vault_Workspace\Inventor_Dwg\BoxCad\Result\5412ESSCH1212056\5412ESSCH1212056.idw

Tolérance ±1/32" sauf spécification contraire

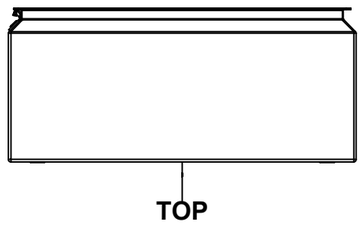


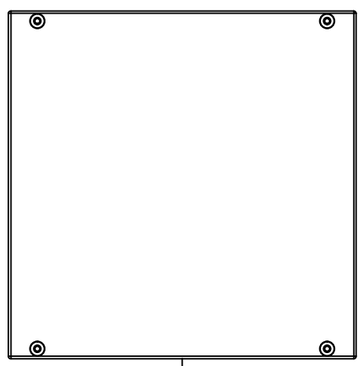


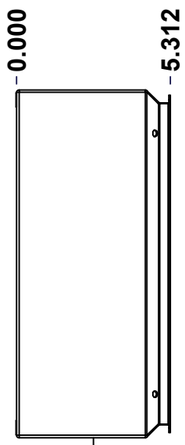


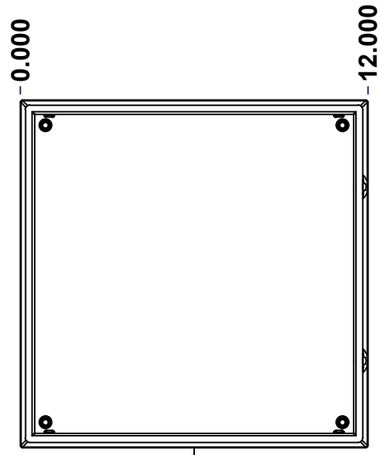


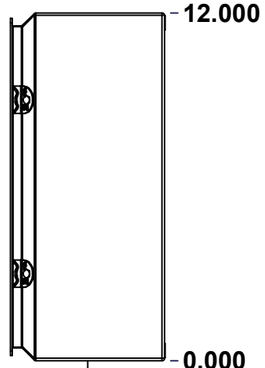


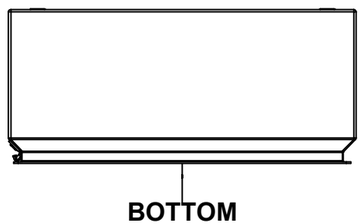


SEE BILL OF MATERIAL ON LAST PAGE

| No. | Revisions | Date | By/Par |
|---|---|---|---|
| | | | |
| | | | |
| | | | |
| | | | |
| | | | |

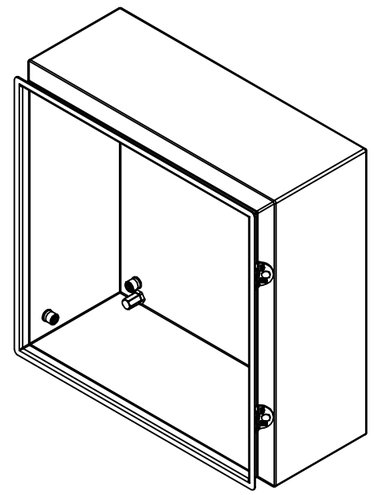

Isometric View

Tél: (450) 979-4373
Fax: (450) 979-4626
www.exmweb.com

Flatness / Aplatissement: Max 3.0mm

Projection

| | | | |
|---|---|---|---|
| Customer / Client | | Date | |
| Drawn By / Dessiné Par | BoxCad: BoxCad | Date | 25-Jul-23 |
| Material / Matière | 16 Ga Stainless Steel 304 (1.4mm) | | |
| Color / Couleur | Unpainted | Finish / Fini | Brushed |
| Description | 5412ESSCH 12" x 12" x 5" Body | Detail Rev. | |
| Part Number / Numéro Pièce | **5412ESSCH1212056B** | Rev. | **0** |



Ce dessin est confidentiel et ne doit pas être reproduit ou utilisé sans le consentement de EXM

This drawing is confidential and must not be reproduced or used without the consent of EXM

**STANDARD FEATURES ARE NOT LISTED IN THIS HOLE TABLE**

**HOLE TABLE - LEFT VIEW (CUSTOM FEATURE ONLY)**

| CUT-OUT | XDIM | YDIM | DESCRIPTION |
|---|---|---|---|
| 1 | 3.625 | 0.875 | STANDOFF M6 x 10mm (Inside) |

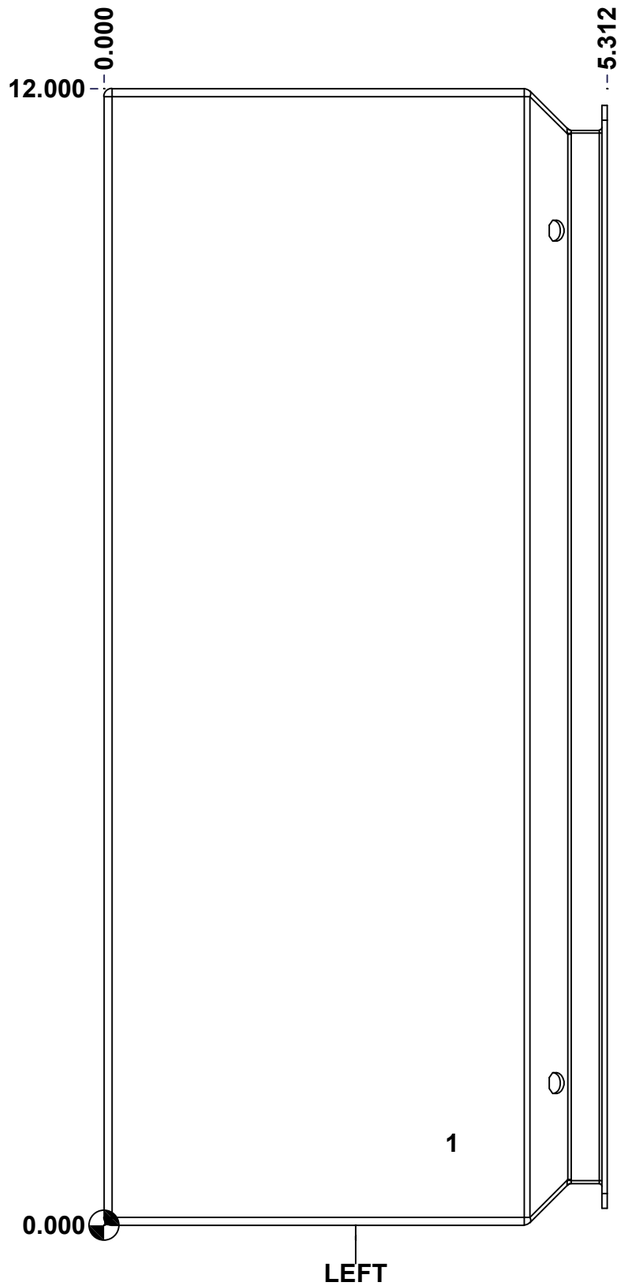


Y+
X- X+
Y-

| Description | Status |
|---|---|
| 5412ESSCH 12" x 12" x 5" Body | (NULL) |
| Part Number / Numéro Pièce: **5412ESSCH1212056B** | Rev.: **0** |



Ce dessin est confidentiel et ne doit pas être reproduit ou utilisé sans le consentement de EXM

This drawing is confidential and must not be reproduced or used without the consent of EXM

Tolerance ±1/32" unless otherwise specified

C:\Vault_Workspace\Inventor_Dwg\BoxCad\Result\5412ESSCH1212056\5412ESSCH1212056.idw

Tolérance ±1/32" sauf spécification contraire

Ce dessin est confidentiel et ne doit pas être reproduit ou utilisé sans le consentement de EXM

**STANDARD FEATURES ARE NOT LISTED IN THIS HOLE TABLE**

**HOLE TABLE - BACK VIEW (CUSTOM FEATURE ONLY)**

| CUT-OUT | XDIM | YDIM | DESCRIPTION |
|---|---|---|---|
| 1 | 0.875 | 0.875 | IP STANDOFF M6 x 10mm (Inside) |
| 2 | 0.875 | 11.125 | IP STANDOFF M6 x 10mm (Inside) |
| 3 | 11.125 | 11.125 | IP STANDOFF M6 x 10mm (Inside) |
| 4 | 11.125 | 0.875 | IP STANDOFF M6 x 10mm (Inside) |
| --- | --- | --- | --- |
| 5 | 11.000 | 0.000 | FOOT 885 ESCHMF2 |
| 6 | 1.000 | 0.000 | FOOT 885 ESCHMF2 |
| 7 | 11.000 | 12.000 | FOOT 885 ESCHMF2 |
| 8 | 1.000 | 12.000 | FOOT 885 ESCHMF2 |
| 9 | 11.000 | 0.344 | RIVET NUT M6_FH_CE (Inside) |
| 10 | 1.000 | 0.344 | RIVET NUT M6_FH_CE (Inside) |
| 11 | 11.000 | 11.656 | RIVET NUT M6_FH_CE (Inside) |
| 12 | 1.000 | 11.656 | RIVET NUT M6_FH_CE (Inside) |

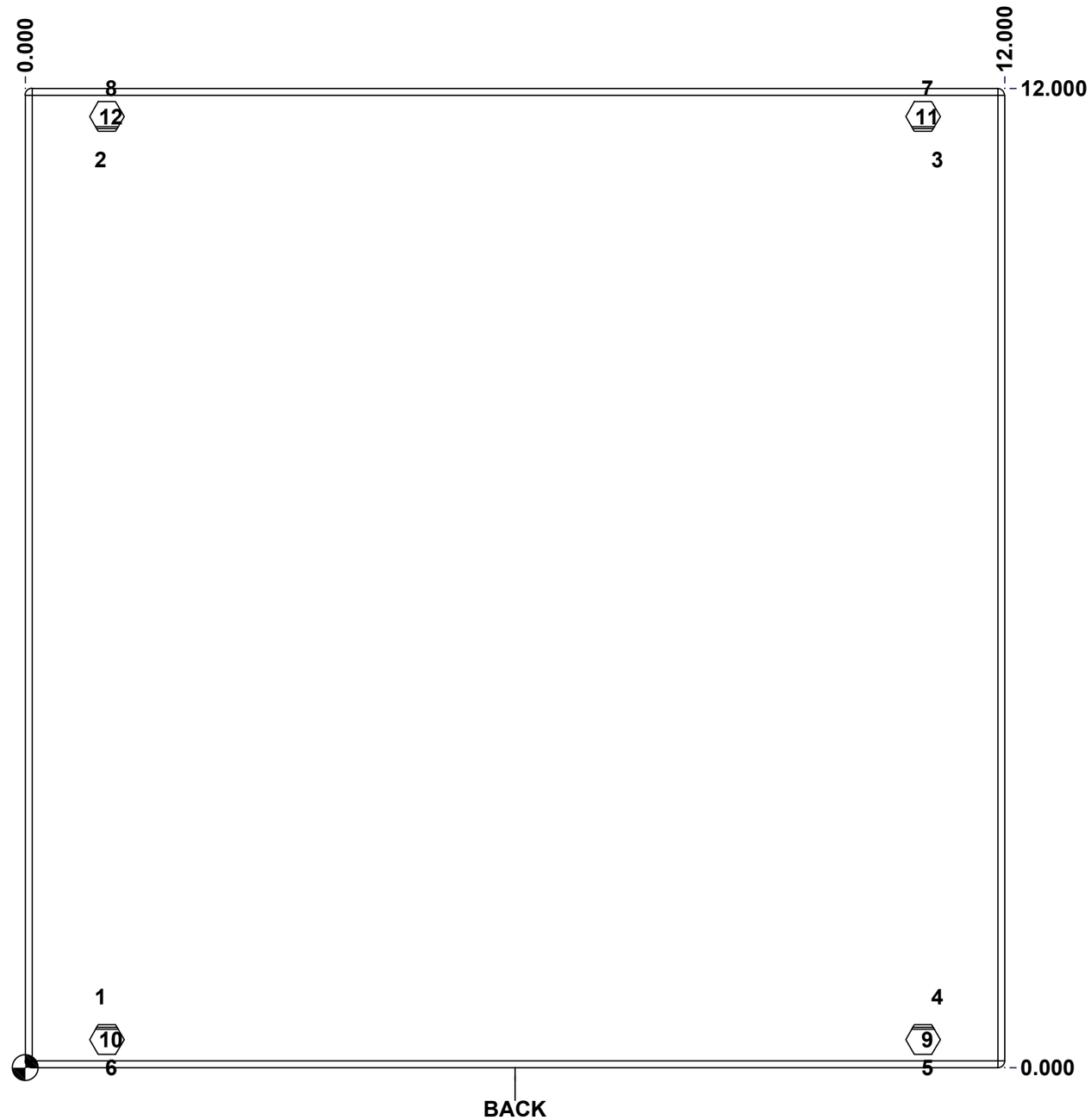


Y+
X- X+
Y-

| Description | Status |
|---|---|
| 5412ESSCH 12" x 12" x 5" Body | (NULL) |

| Part Number / Numéro Pièce | Rev. | |
|---|---|---|
| 5412ESSCH1212056B | 0 | 5 / 9 |

This drawing is confidential and must not be reproduced or used without the consent of EXM

Tolerance ±1/32" unless otherwise specified

C:\Vault_Workspace\Inventor_Dwg\BoxCad\Result\5412ESSCH1212056\5412ESSCH1212056.idw

Tolérance ±1/32" sauf spécification contraire

Ce dessin est confidentiel et ne doit pas être reproduit ou utilisé sans le consentement de EXM

| No. | Revisions | Date | By/Par |
|---|---|---|---|
| | | | |
| | | | |
| | | | |
| | | | |
| | | | |

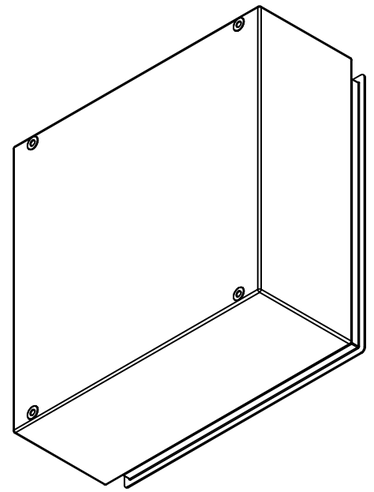

**Isometric View**

| Qty | Part Number | Rev | Description |
|---|---|---|---|
| 4 | RIVET_NUT_SS_M6_FH_CE | 0 | Stainless Steel Rivet Nut M6 (Low Profile Close End) |
| 1 | 5412ESSCH1212056B-P | 0 | 5412ESSCH 12" x 12" x 5" Body Part |
| 2 | STK-A-70469 | 6 | 5412 ESSMCH - Stainless Steel 316 Body Catch Assembly |
| 2 | STK-Q-08100 | 1 | M5 Nylon Insert Lock Nut |
| 5 | STK-Q-08500 | 4 | Stainless Steel Standoff M6 x 10mm |

Parts List

Tél: (450) 979-4373
Fax: (450) 979-4626
www.exmweb.com

Flatness
Aplatissement
Max 3.0mm

Projection

Customer
Client

Date

Drawn By
Dessiné Par
BoxCad: BoxCad

Date
25-Jul-23

Material
Matière
16 Ga Stainless Steel 304 (1.4mm)

Color
Couleur
Unpainted

Finish
Fini
Brushed

Description
5412ESSCH 12" x 12" x 5" Body

Detail Rev.

Part Number
Numéro Pièce
**5412ESSCH1212056B**

Rev.
**0**

This drawing is confidential and must not be reproduced or used without the consent of EXM

Tolerance ±1/32" unless otherwise specified

C:\Vault_Workspace\Inventor_Dwg\BoxCad\Result\5412ESSCH1212056\5412ESSCH1212056.idw

Tolérance ±1/32" sauf spécification contraire

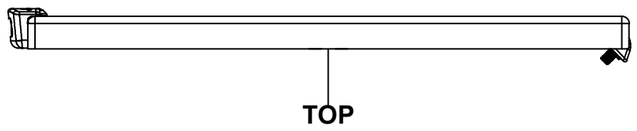


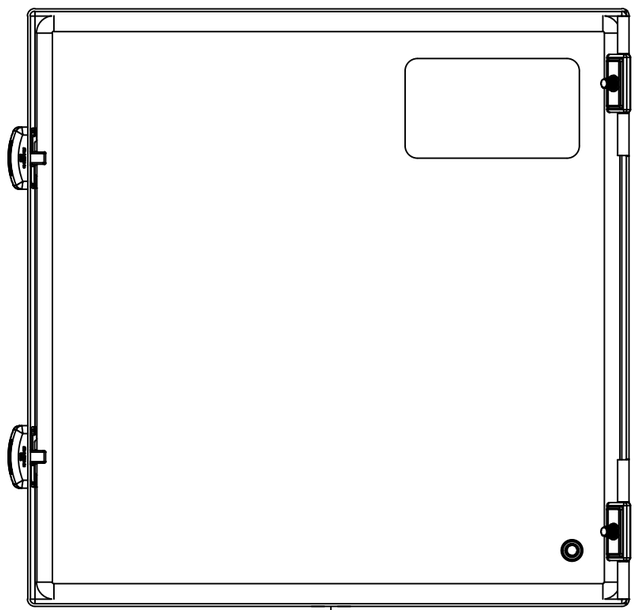


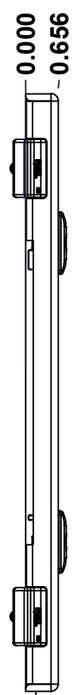


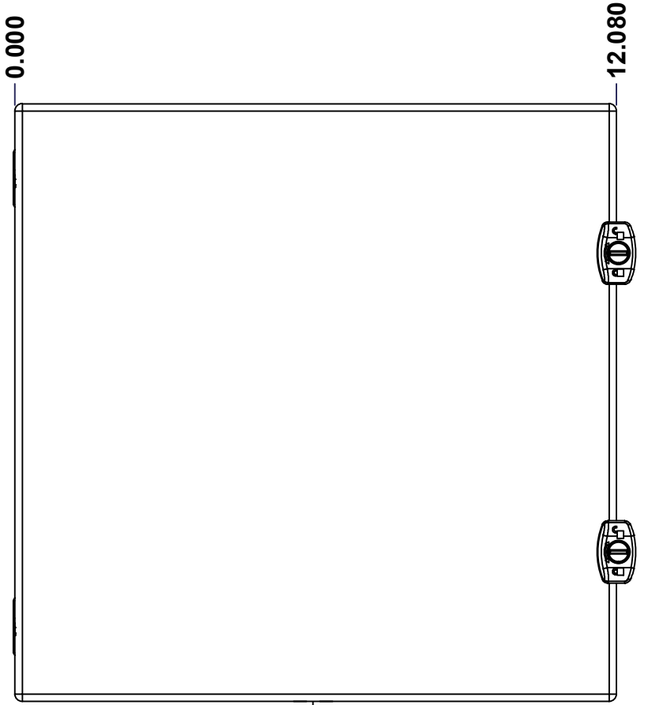


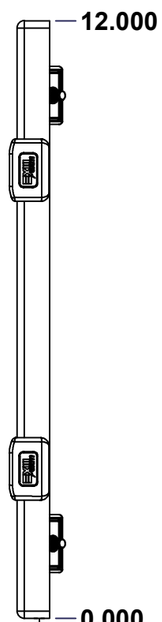


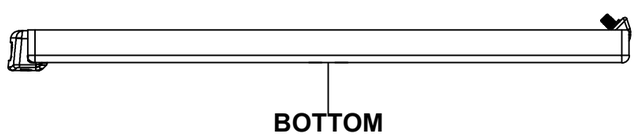


**SEE BILL OF MATERIAL ON LAST PAGE**

| No. | Revisions | Date | By/Par |
|---|---|---|---|
| | | | |
| | | | |
| | | | |
| | | | |
| | | | |

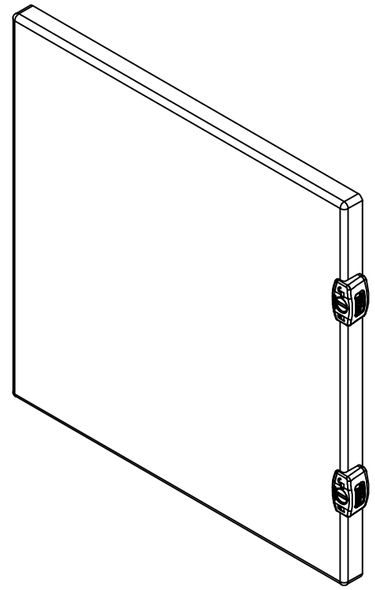

**Isometric View**

exm
Tél: (450) 979-4373
Fax: (450) 979-4626
www.exmweb.com

Flatness / Aplatissement: Max 3.0mm

Projection

| | | | |
|---|---|---|---|
| Customer / Client | | Date | |
| Drawn By / Dessiné Par | BoxCad: BoxCad | Date | 25-Jul-23 |
| Material / Matière | 16 Ga Stainless Steel 304 (1.4mm) | | |
| Color / Couleur | Unpainted | Finish / Fini | Brushed |
| Description | 5412ESSCH 12" x 12" Cover | Detail Rev. | |
| Part Number / Numéro Pièce | **5412ESSCH1212056C** | Rev. | **0** |



Ce dessin est confidentiel et ne doit pas être reproduit ou utilisé sans le consentement de EXM

This drawing is confidential and must not be reproduced or used without the consent of EXM

Tolerance ±1/32" unless otherwise specified

C:\Vault_Workspace\Inventor_Dwg\BoxCad\Result\5412ESSCH1212056\5412ESSCH1212056.idw

Tolérance ±1/32" sauf spécification contraire

**STANDARD FEATURES ARE NOT LISTED IN THIS HOLE TABLE**

**HOLE TABLE - FRONT VIEW (CUSTOM FEATURE ONLY)**

| CUT-OUT | XDIM | YDIM | DESCRIPTION |
|---|---|---|---|
| 1 | 1.145 | 1.125 | STANDOFF M6 x 10mm (Inside) |
| 2 | 2.750 | 10.000 | LABEL_EXM |
| 3 | 12.080 | 9.000 | LOCK 880 SCQ3MS @ 0.0° |
| 4 | 12.080 | 3.000 | LOCK 880 SCQ3MS @ 0.0° |

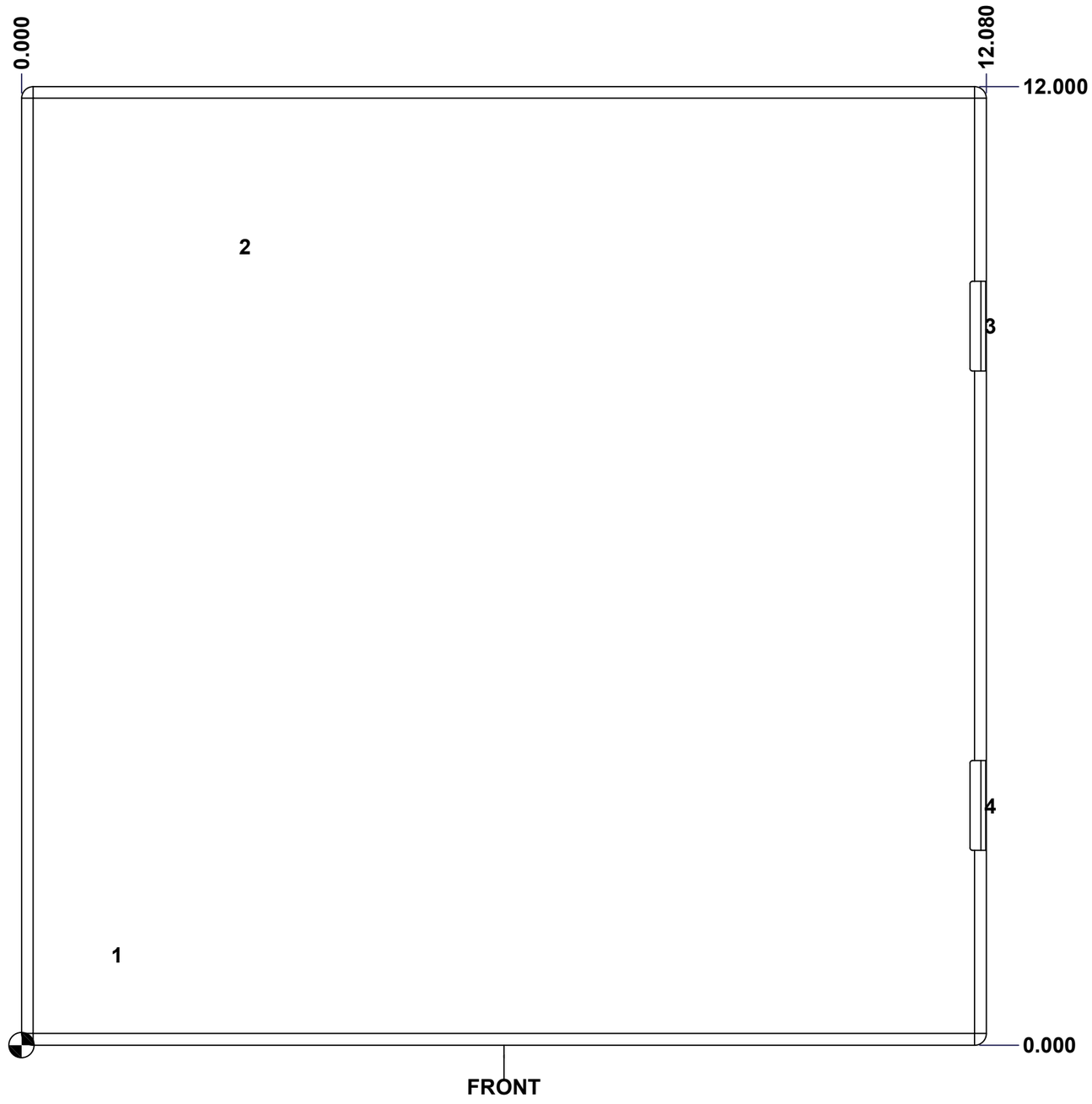


Ce dessin est confidentiel et ne doit pas être reproduit ou utilisé sans le consentement de EXM

Y+
X- X+
Y-

| | | |
|---|---|---|
| Description: 5412ESSCH 12" x 12" Cover | Status: (NULL) | |
| Part Number / Numéro Pièce: **5412ESSCH1212056C** | Rev.: **0** | 8 / 9 |

This drawing is confidential and must not be reproduced or used without the consent of EXM

Tolerance ±1/32" unless otherwise specified

C:\Vault_Workspace\Inventor_Dwg\BoxCad\Result\5412ESSCH1212056\5412ESSCH1212056.idw

Tolérance ±1/32" sauf spécification contraire

Ce dessin est confidentiel et ne doit pas être reproduit ou utilisé sans le consentement de EXM

| No. | Revisions | Date | By/Par |
|---|---|---|---|
| | | | |
| | | | |
| | | | |
| | | | |
| | | | |

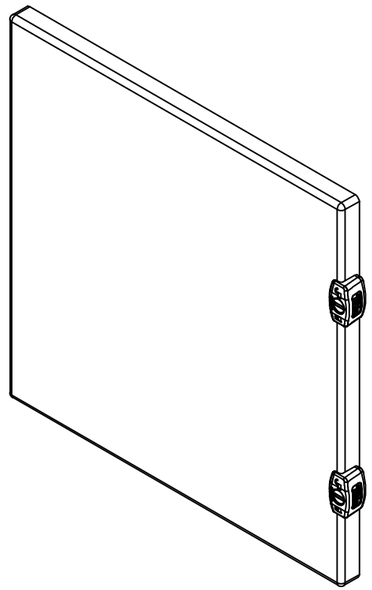

**Isometric View**

| Qty | Part Number | Rev | Description |
|---|---|---|---|
| 1 | 5412ESSCH1212056G | 0 | 5412ESSCH 12" x 12" Gasket |
| 1 | STK-S-00100 | 0 | 3.5" x 2" Silver Milar Flexcon Sticker |
| 1 | STK-Q-08500 | 4 | Stainless Steel Standoff M6 x 10mm |
| 1 | 5412ESSCH1212056C-P | 0 | 5412ESSCH 12" x 12" Cover Part |
| 2 | STK-A-33038 | 3 | 5412 ESSMCH - Stainless Steel Hinge |
| 2 | 880SCQ3S | 4 | 5412 ESSMCH - Stainless Steel External Lock Assy - Slot Lock |

Parts List

Tél: (450) 979-4373
Fax: (450) 979-4626
www.exmweb.com

Flatness / Aplatissement: Max 3.0mm

Projection

Customer / Client

Date

Drawn By / Dessiné Par: BoxCad: BoxCad

Date: 25-Jul-23

Material / Matière: 16 Ga Stainless Steel 304 (1.4mm)

Color / Couleur: Unpainted

Finish / Fini: Brushed

Description: 5412ESSCH 12" x 12" Cover

Detail Rev.

Part Number / Numéro Pièce: **5412ESSCH1212056C**

Rev.: **0**

This drawing is confidential and must not be reproduced or used without the consent of EXM

Tolerance ±1/32" unless otherwise specified

C:\Vault_Workspace\Inventor_Dwg\Inv-8\880SP\880SP1212G.idw

Tolérance ±1/32" sauf spécification contraire

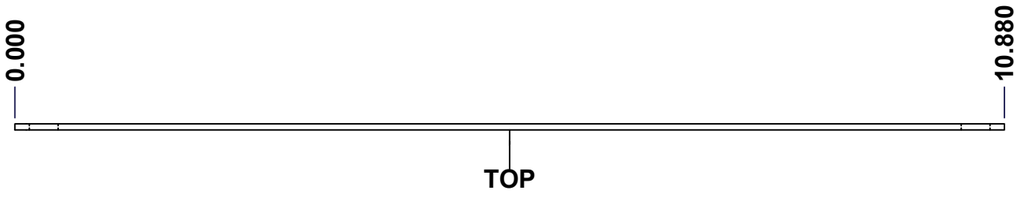


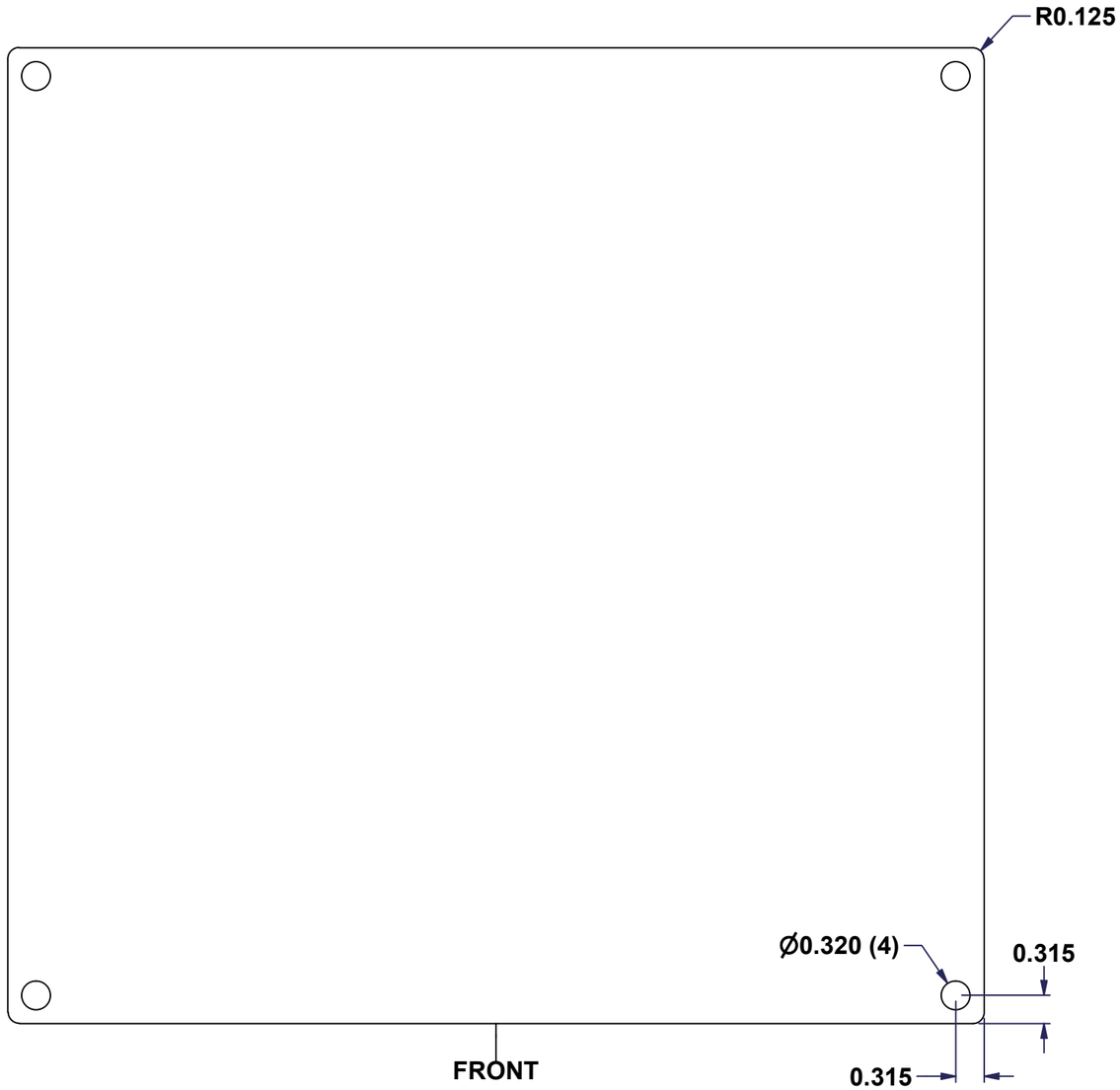


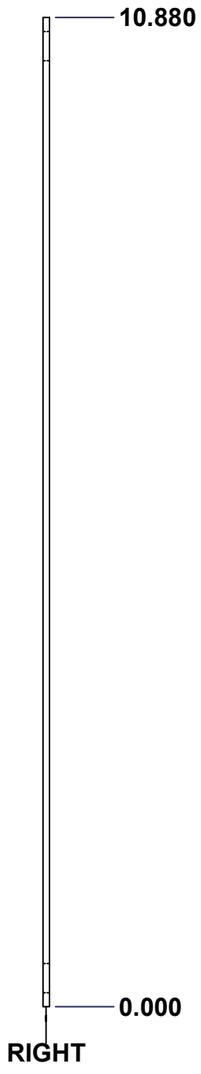


SEE BILL OF MATERIAL ON LAST PAGE

| No. | Revisions | Date | By/Par |
|---|---|---|---|
| | | | |
| | | | |
| | | | |
| | | | |
| | | | |

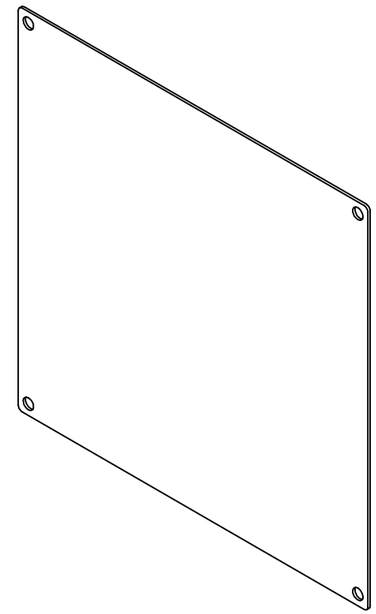

Isometric View

exm
Tél: (450) 979-4373
Fax: (450) 979-4626
www.exmweb.com

Flatness / Aplatissement: Max 3.0mm

Projection

| | | | |
|---|---|---|---|
| Customer / Client | | Date | |
| Drawn By / Dessiné Par | BoxCad | Date | 23-Jan-07 |
| Material / Matière | 14 Ga Galvanized (1.7mm) | | |
| Color / Couleur | Unpainted | Finish / Fini | Galvanized |
| Description | 880 SP1212G - Inner Panel | Detail Rev. | |
| Part Number / Numéro Pièce | **880 SP1212G** | Rev. | **0** |



Ce dessin est confidentiel et ne doit pas être reproduit ou utilisé sans le consentement de EXM

This drawing is confidential and must not be reproduced or used without the consent of EXM

Tolerance ±1/32" unless otherwise specified

C:\Vault_Workspace\Inventor_Dwg\Inv-8\880SP\880SP1212G.idw

Tolérance ±1/32" sauf spécification contraire

Ce dessin est confidentiel et ne doit pas être reproduit ou utilisé sans le consentement de EXM

| No. | Revisions | Date | By/Par |
|---|---|---|---|
| | | | |
| | | | |
| | | | |
| | | | |
| | | | |

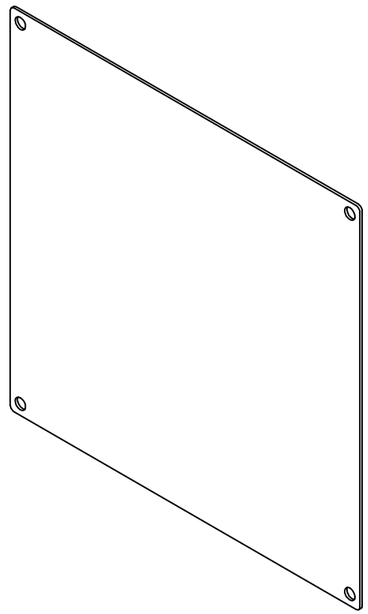

**Isometric View**

EXM exm
Tél: (450) 979-4373
Fax: (450) 979-4626
www.exmweb.com

Flatness
Aplatissement
Max 3.0mm

Projection

Customer
Client

Date

Drawn By
Dessiné Par
BoxCad

Date
23-Jan-07

Material
Matière
14 Ga Galvanized (1.7mm)

Color
Couleur
Unpainted

Finish
Fini
Galvanized

Description
880 SP1212G - Inner Panel

Detail Rev.

Part Number
Numéro Pièce
**880 SP1212G**

Rev.
**0**

2 / 2

| Qty | Part Number | Rev | Description |
|---|---|---|---|
| 1 | 880 SP1212G-P | 0 | 880 SP1212G - Inner Panel Part |

Parts List