This drawing is confidential and must not be reproduced or used without the consent of EXM

Tolerance ±1/32" unless otherwise specified

C:\Vault_Workspace\Inventor_Dwg\BoxCad\Result\5412ESSMCH1008066NOIP\5412ESSMCH1008066NOIP.idw

Tolérance ±1/32" sauf spécification contraire

Ce dessin est confidentiel et ne doit pas être reproduit ou utilisé sans le consentement de EXM

No.	Revisions	Date	By/Par

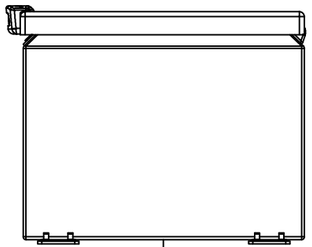

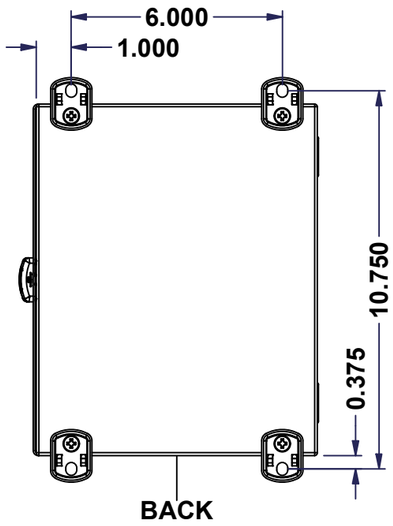

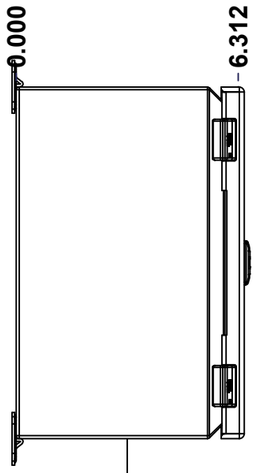

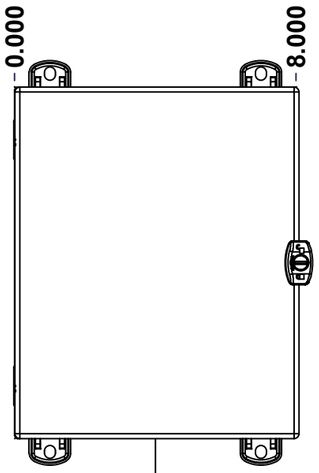

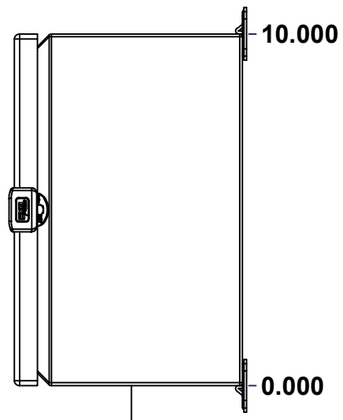

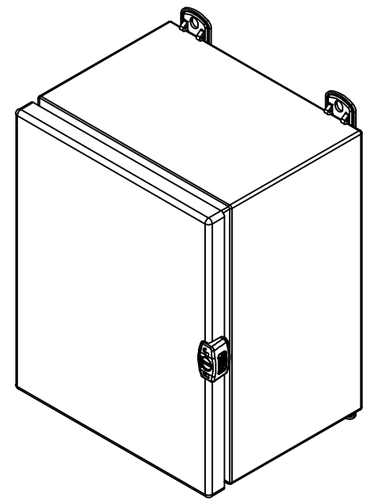

Isometric View

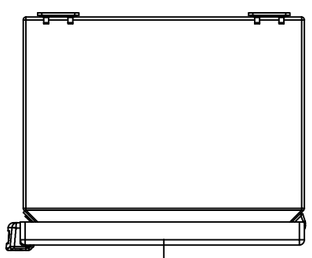

GRAIN DIRECTION:
TOP/BOTTOM: HORIZONTAL
LEFT/RIGHT/BACK/FRONT:VERTICAL

SEE BILL OF MATERIAL ON LAST PAGE

EXM exm
Tél: (450) 979-4373
Fax: (450) 979-4626
www.exmweb.com

Flatness Aplatissement	Max 3.0mm		
Projection			
Customer Client		Date	
Drawn By Dessiné Par	BoxCad: BoxCad	Date	13-Mar-23
Material Matière	16 Ga Stainless Steel 316 (1.4mm)		
Color Couleur	Unpainted	Finish Fini	Brushed
Description	5412ESSMCH 10" x 8" x 6" Assembly	Detail Rev.	
Part Number Numéro Pièce	**5412ESSMCH1008066NOIP**	Rev.	**0**
		1 /	9

This drawing is confidential and must not be reproduced or used without the consent of EXM

Tolerance ±1/32" unless otherwise specified

C:\Vault_Workspace\Inventor_Dwg\BoxCad\Result\5412ESSMCH1008066NOIP\5412ESSMCH1008066NOIP.idw

Tolérance ±1/32" sauf spécification contraire

Ce dessin est confidentiel et ne doit pas être reproduit ou utilisé sans le consentement de EXM

NOTE

ITEM	DESCRIPTION
1	NEMA 4X Enclosure
2	C/W Standard ground standoffs on box and cover
3	W/O Standard door stiffener
4	W/O Inner panel
5	C/W Standard inner panel mounting standoffs
6	C/W 885 ESCHMF2 Mounting Feet (Kit)

No.	Revisions	Date	By/Par

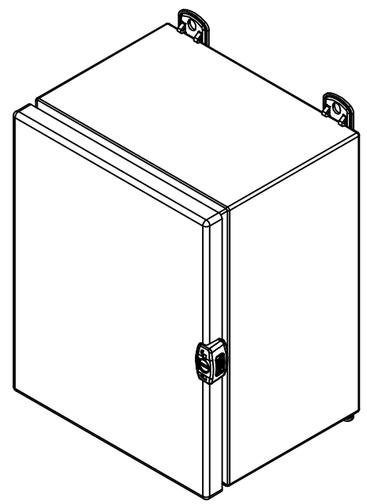

Isometric View

PACKING

ITEM	QTY	DESCRIPTION
STK-E-04311	1	CARTON 5412 ESCH100806
Plastic bag	1	To protect cover surface and inside gasket
Packaging label	1	White label with product number
STK-S-01100	1	ESCH EXM SQUARE STICKER

Qty	Part Number	Rev	Description
1	STK-K-02945	0	5412 ESSMCH Accessory Kit
1	5412ESSMCH1008066NOIPC	0	5412ESSMCH 10" x 8" Cover
1	5412ESSMCH1008066NOIPB	0	5412ESSMCH 10" x 8" x 6" Body
2	STK-Q-08100	1	M5 Nylon Insert Lock Nut
2	STK-Q-10249	0	M5 Sealing Washer

Parts List

Tél: (450) 979-4373
Fax: (450) 979-4626
www.exmweb.com

Flatness
Aplatissement
Max 3.0mm

Projection

Customer
Client

Date

Drawn By
Dessiné Par
BoxCad: BoxCad

Date 13-Mar-23

Material
Matière
16 Ga Stainless Steel 316 (1.4mm)

Color
Couleur
Unpainted

Finish
Fini
Brushed

Description
5412ESSMCH 10" x 8" x 6" Assembly

Detail Rev.

Part Number
Numéro Pièce
5412ESSMCH1008066NOIP

Rev.
0

This drawing is confidential and must not be reproduced or used without the consent of EXM

Tolerance ±1/32" unless otherwise specified

C:\Vault_Workspace\Inventor_Dwg\BoxCad\Result\5412ESSMCH1008066NOIP\5412ESSMCH1008066NOIP.idw

Tolérance ±1/32" sauf spécification contraire

Ce dessin est confidentiel et ne doit pas être reproduit ou utilisé sans le consentement de EXM

No.	Revisions	Date	By/Par

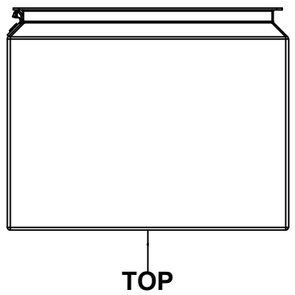

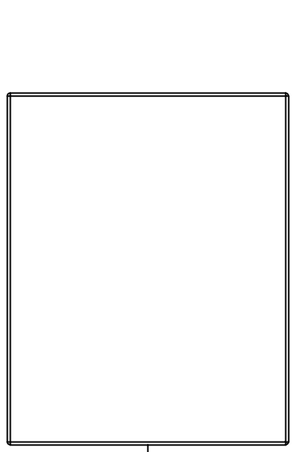

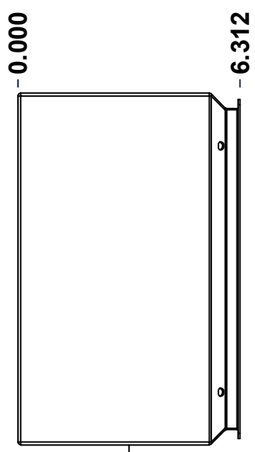

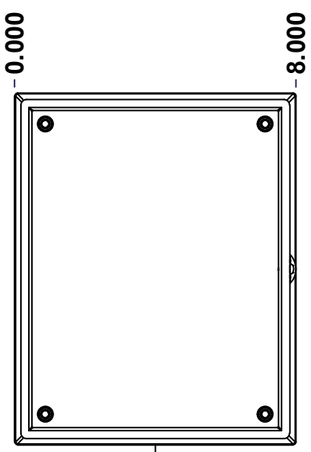

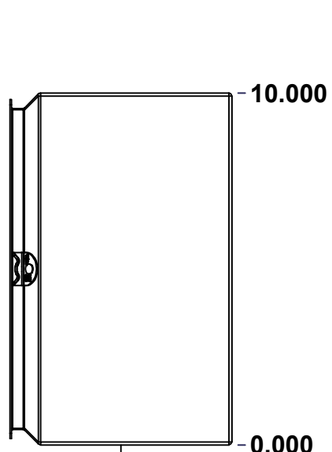

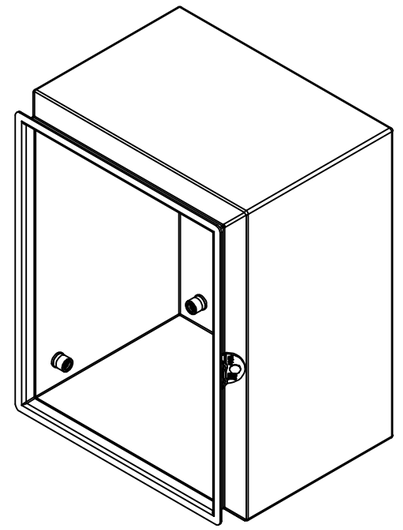

Isometric View

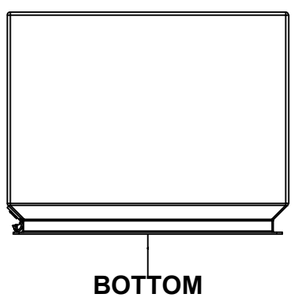

Tél: (450) 979-4373
Fax: (450) 979-4626
www.exmweb.com

Flatness / Aplatissement: Max 3.0mm

Projection

Customer / Client		Date	
Drawn By / Dessiné Par	BoxCad: BoxCad	Date	13-Mar-23
Material / Matière	16 Ga Stainless Steel 316 (1.4mm)		
Color / Couleur	Unpainted	Finish / Fini	Brushed
Description	5412ESSMCH 10" x 8" x 6" Body	Detail Rev.	
Part Number / Numéro Pièce	5412ESSMCH1008066NOIPB	Rev.	0

SEE BILL OF MATERIAL ON LAST PAGE

This drawing is confidential and must not be reproduced or used without the consent of EXM

Tolerance ±1/32" unless otherwise specified

C:\Vault_Workspace\Inventor_Dwg\BoxCad\Result\5412ESSMCH1008066NOIP\5412ESSMCH1008066NOIP.idw

Tolérance ±1/32" sauf spécification contraire

STANDARD FEATURES ARE NOT LISTED IN THIS HOLE TABLE

HOLE TABLE - LEFT VIEW (CUSTOM FEATURE ONLY)

CUT-OUT	XDIM	YDIM	DESCRIPTION
1	4.625	0.875	STANDOFF M6 x 10mm (Inside)

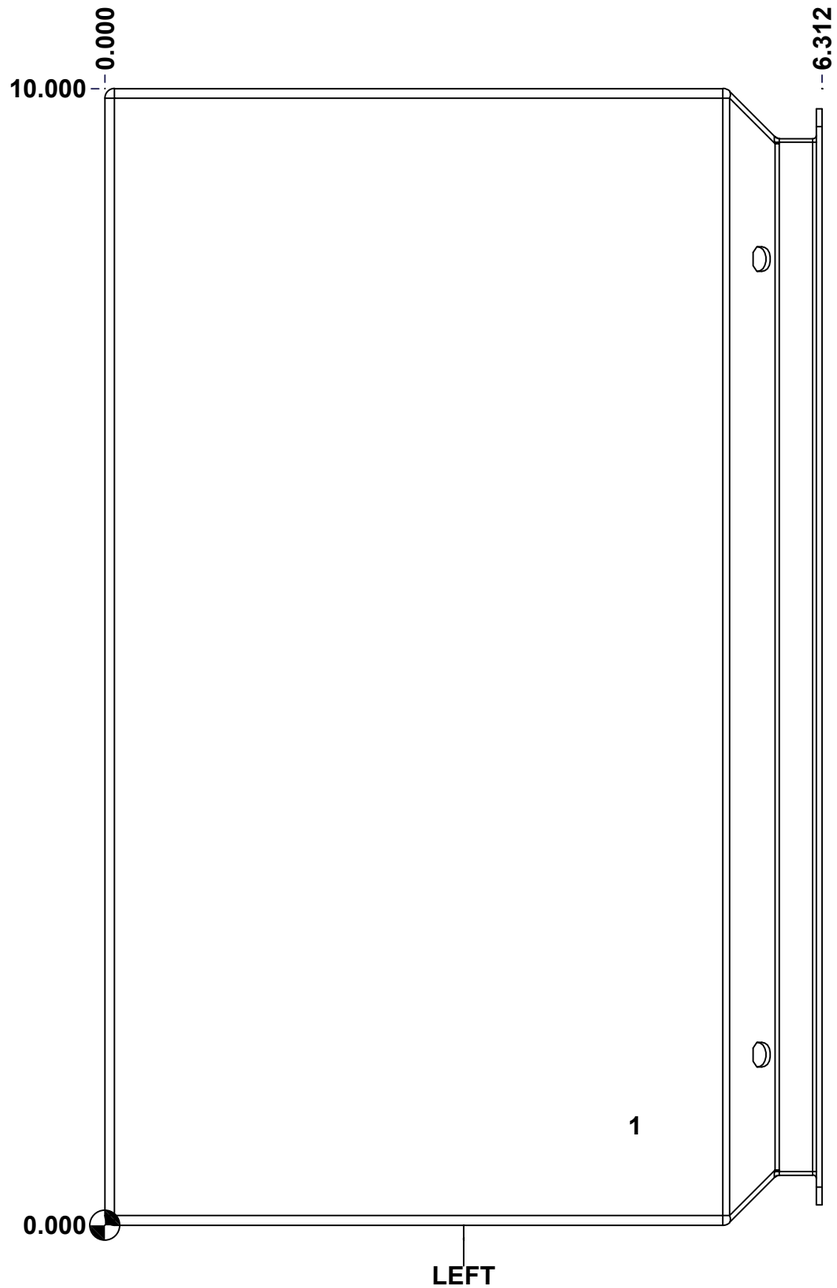

Y+
X- X+
Y-

Description: 5412ESSMCH 10" x 8" x 6" Body	Status: (NULL)	
Part Number / Numéro Pièce: 5412ESSMCH1008066NOIPB	Rev.: 0	4 / 9

Ce dessin est confidentiel et ne doit pas être reproduit ou utilisé sans le consentement de EXM

Tolerance ±1/32" unless otherwise specified

C:\Vault_Workspace\Inventor_Dwg\BoxCad\Result\5412ESSMCH1008066NOIP\5412ESSMCH1008066NOIP.idw

Tolérance ±1/32" sauf spécification contraire

This drawing is confidential and must not be reproduced or used without the consent of EXM

Ce dessin est confidentiel et ne doit pas être reproduit ou utilisé sans le consentement de EXM

STANDARD FEATURES ARE NOT LISTED IN THIS HOLE TABLE

HOLE TABLE - BACK VIEW (CUSTOM FEATURE ONLY)

CUT-OUT	XDIM	YDIM	DESCRIPTION
1	0.875	0.875	IP STANDOFF M6 x 10mm (Inside)
2	0.875	9.125	IP STANDOFF M6 x 10mm (Inside)
3	7.125	9.125	IP STANDOFF M6 x 10mm (Inside)
4	7.125	0.875	IP STANDOFF M6 x 10mm (Inside)
---	---	---	---
5	1.000	10.000	FOOT 885 ESCHMF2
6	7.000	0.000	FOOT 885 ESCHMF2
7	1.000	0.000	FOOT 885 ESCHMF2
8	7.000	10.000	FOOT 885 ESCHMF2

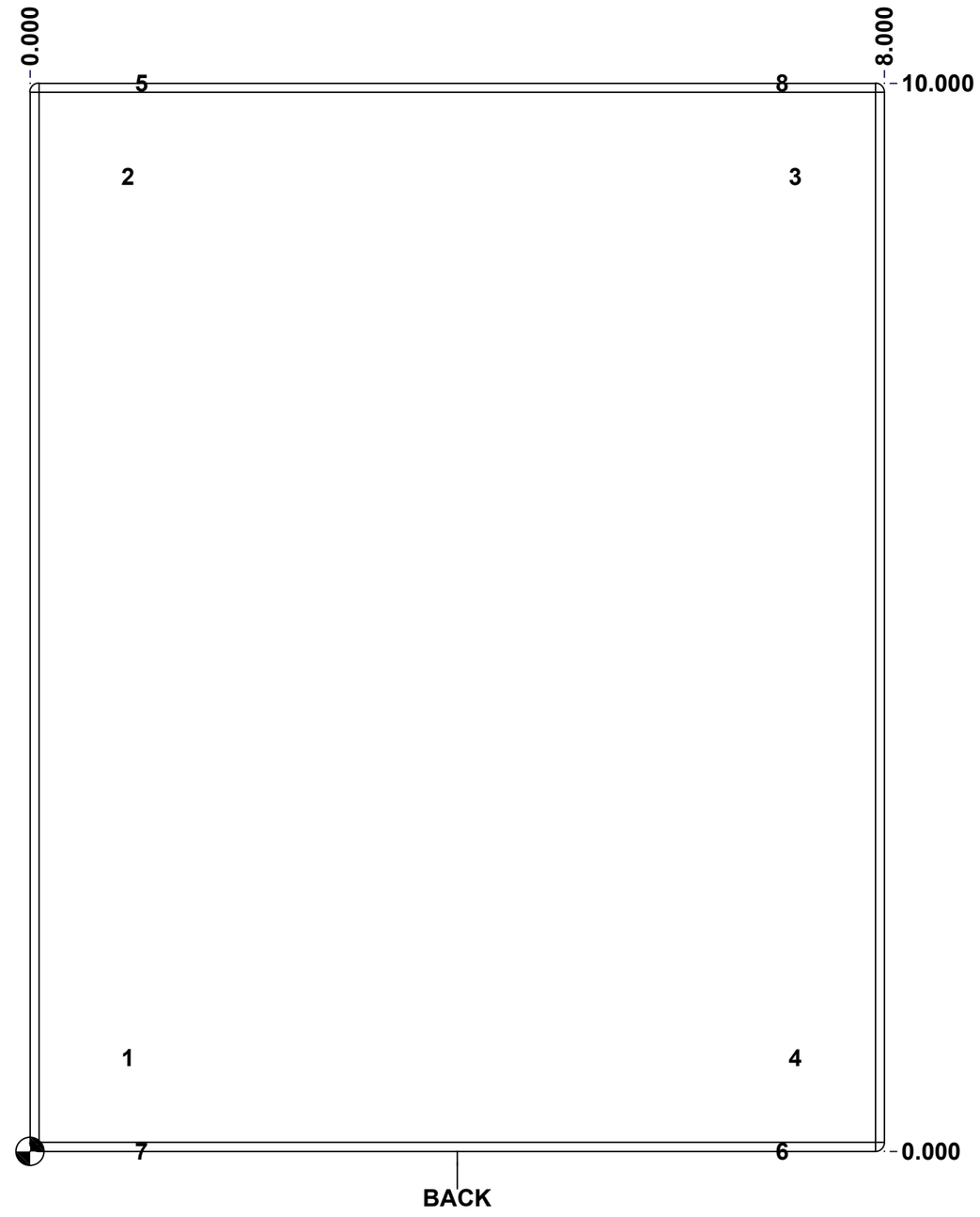

Y+
X- X+
Y-

Description	Status
5412ESSMCH 10" x 8" x 6" Body	(NULL)
Part Number / Numéro Pièce: 5412ESSMCH1008066NOIPB	Rev. 0

This drawing is confidential and must not be reproduced or used without the consent of EXM

Tolerance ±1/32" unless otherwise specified

C:\Vault_Workspace\Inventor_Dwg\BoxCad\Result\5412ESSMCH1008066NOIP\5412ESSMCH1008066NOIP.idw

Tolérance ±1/32" sauf spécification contraire

Ce dessin est confidentiel et ne doit pas être reproduit ou utilisé sans le consentement de EXM

No.	Revisions	Date	By/Par

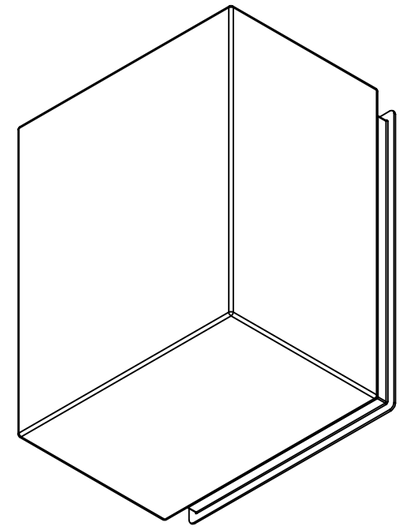

Isometric View

Qty	Part Number	Rev	Description
1	STK-Q-08100	1	M5 Nylon Insert Lock Nut
1	5412ESSMCH1008066NOIPB-P	0	5412ESSMCH 10" x 8" x 6" Body Part
1	STK-A-70469	6	5412 ESSMCH - Stainless Steel 316 Body Catch Assembly
5	STK-Q-08500	4	Stainless Steel Standoff M6 x 10mm

Parts List

Tél: (450) 979-4373
Fax: (450) 979-4626
www.exmweb.com

Flatness / Aplatissement: Max 3.0mm

Projection

Customer / Client:

Date:

Drawn By / Dessiné Par: BoxCad: BoxCad

Date: 13-Mar-23

Material / Matière: 16 Ga Stainless Steel 316 (1.4mm)

Color / Couleur: Unpainted

Finish / Fini: Brushed

Description: 5412ESSMCH 10" x 8" x 6" Body

Detail Rev.:

Part Number / Numéro Pièce: **5412ESSMCH1008066NOIPB**

Rev.: **0**

This drawing is confidential and must not be reproduced or used without the consent of EXM

Tolerance ±1/32" unless otherwise specified

C:\Vault_Workspace\Inventor_Dwg\BoxCad\Result\5412ESSMCH1008066NOIP\5412ESSMCH1008066NOIP.idw

Tolérance ±1/32" sauf spécification contraire

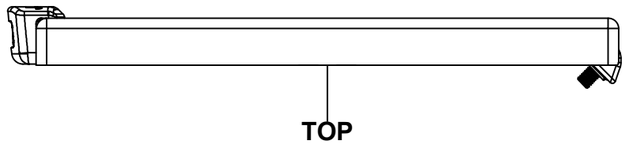

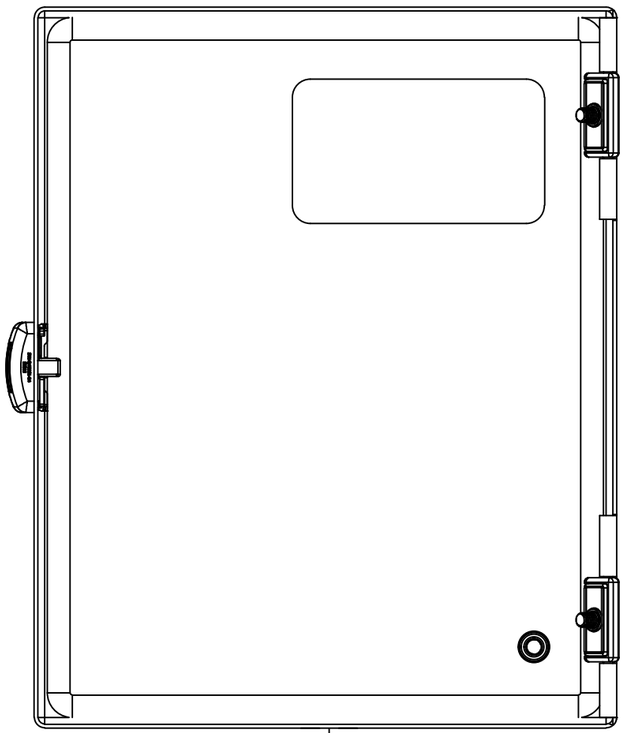

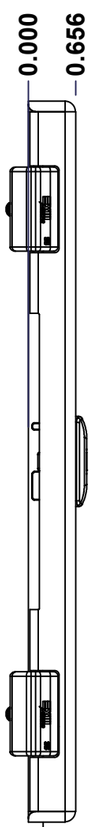

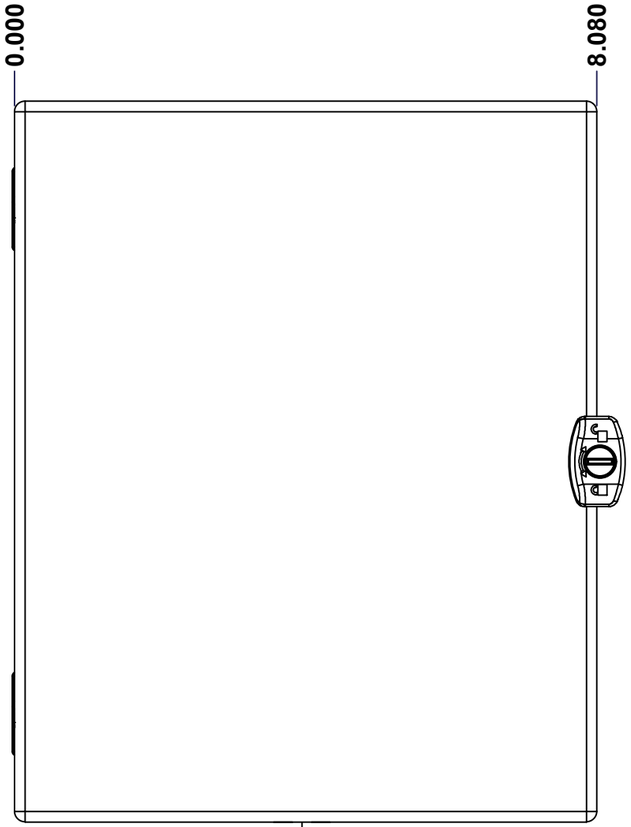

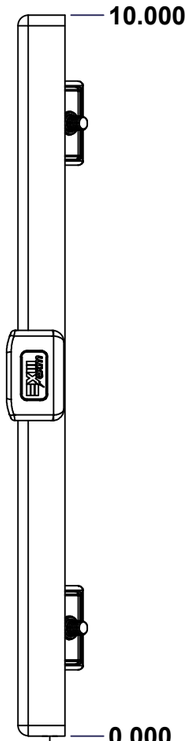

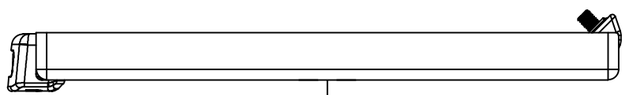

No.	Revisions	Date	By/Par

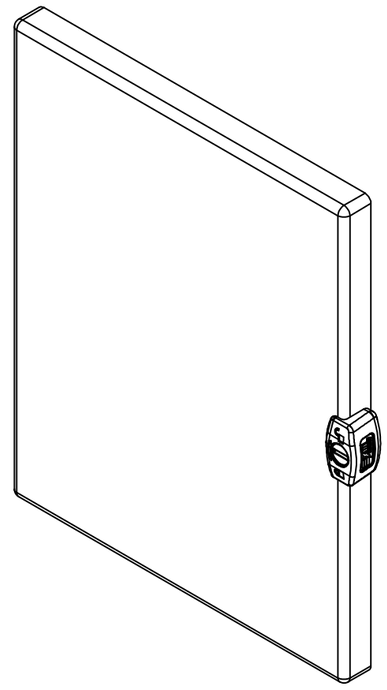

Isometric View

Ce dessin est confidentiel et ne doit pas être reproduit ou utilisé sans le consentement de EXM

exm
Tél: (450) 979-4373
Fax: (450) 979-4626
www.exmweb.com

Flatness / Aplatissement: Max 3.0mm

Projection

Customer / Client		Date	
Drawn By / Dessiné Par	BoxCad: BoxCad	Date	13-Mar-23
Material / Matière	16 Ga Stainless Steel 316 (1.4mm)		
Color / Couleur	Unpainted	Finish / Fini	Brushed
Description	5412ESSMCH 10" x 8" Cover	Detail Rev.	
Part Number / Numéro Pièce	5412ESSMCH1008066NOIPC	Rev.	0

SEE BILL OF MATERIAL ON LAST PAGE

This drawing is confidential and must not be reproduced or used without the consent of EXM

Tolerance ±1/32" unless otherwise specified

C:\Vault_Workspace\Inventor_Dwg\BoxCad\Result\5412ESSMCH1008066NOIP\5412ESSMCH1008066NOIP.idw

Tolérance ±1/32" sauf spécification contraire

STANDARD FEATURES ARE NOT LISTED IN THIS HOLE TABLE

HOLE TABLE - FRONT VIEW (CUSTOM FEATURE ONLY)

CUT-OUT	XDIM	YDIM	DESCRIPTION
1	1.145	1.125	STANDOFF M6 x 10mm (Inside)
2	2.750	8.000	LABEL_EXM
3	8.080	5.000	LOCK 880 SCQ3MS @ 0.0°

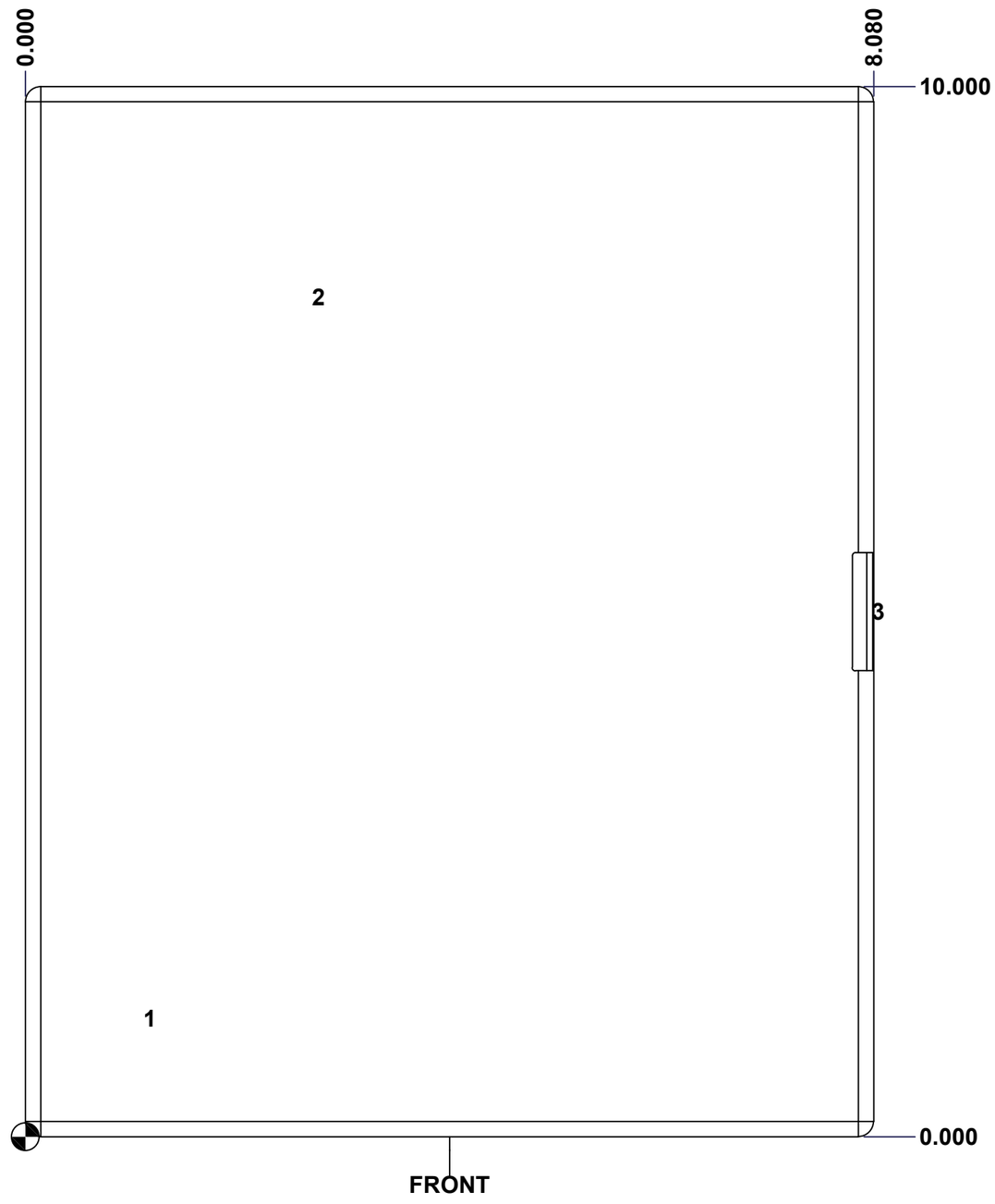

Ce dessin est confidentiel et ne doit pas être reproduit ou utilisé sans le consentement de EXM

Y+
X- X+
Y-

Description: 5412ESSMCH 10" x 8" Cover	Status: (NULL)
Part Number / Numéro Pièce: 5412ESSMCH1008066NOIPC	Rev.: 0

This drawing is confidential and must not be reproduced or used without the consent of EXM

Tolerance ±1/32" unless otherwise specified

C:\Vault_Workspace\Inventor_Dwg\BoxCad\Result\5412ESSMCH1008066NOIP\5412ESSMCH1008066NOIP.idw

Tolérance ±1/32" sauf spécification contraire

Ce dessin est confidentiel et ne doit pas être reproduit ou utilisé sans le consentement de EXM

No.	Revisions	Date	By/Par

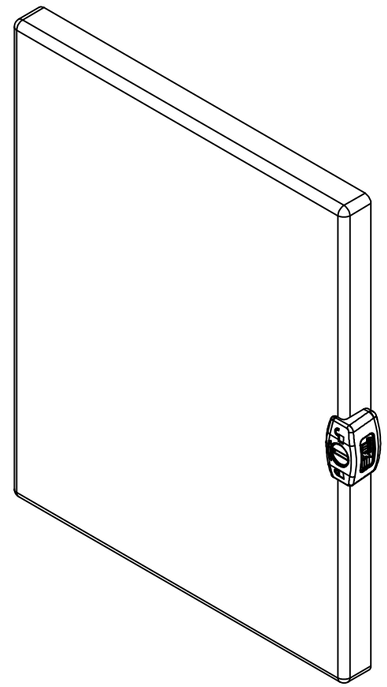

Isometric View

Qty	Part Number	Rev	Description
1	5412ESSMCH1008066NOIPG	0	5412ESSMCH 10" x 8" Gasket
1	880SCQ3S	4	5412 ESSMCH - Stainless Steel External Lock Assy - Slot Lock
1	STK-S-00100	0	3.5" x 2" Silver Milar Flexcon Sticker
1	STK-Q-08500	4	Stainless Steel Standoff M6 x 10mm
1	5412ESSMCH1008066NOIPC-P	0	5412ESSMCH 10" x 8" Cover Part
2	STK-A-33038	3	5412 ESSMCH - Stainless Steel Hinge

Parts List

Tél: (450) 979-4373
Fax: (450) 979-4626
www.exmweb.com

Flatness / Aplatissement: Max 3.0mm

Projection

Customer / Client:

Date:

Drawn By / Dessiné Par: BoxCad: BoxCad

Date: 13-Mar-23

Material / Matière: 16 Ga Stainless Steel 316 (1.4mm)

Color / Couleur: Unpainted

Finish / Fini: Brushed

Description: 5412ESSMCH 10" x 8" Cover

Detail Rev.:

Part Number / Numéro Pièce: **5412ESSMCH1008066NOIPC**

Rev.: **0**