This drawing is confidential and must not be reproduced or used without the consent of EXM

Ce dessin est confidentiel et ne doit pas être reproduit ou utilisé sans le consentement de EXM

TOP

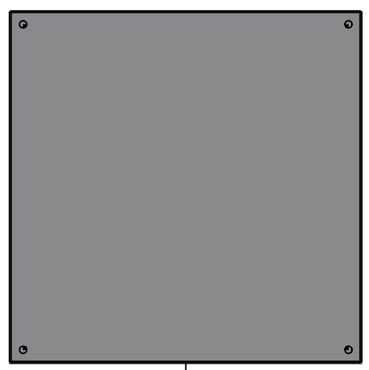

BACK

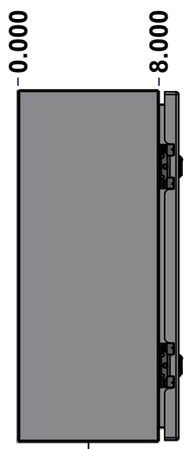

LEFT

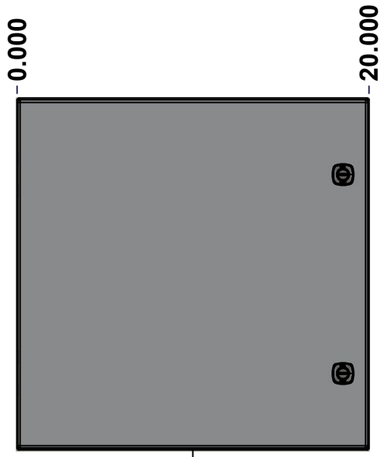

FRONT

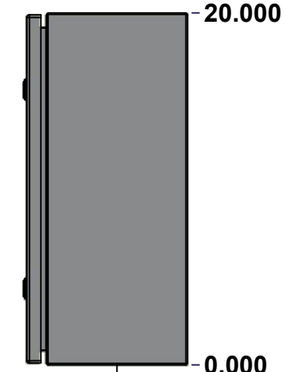

RIGHT

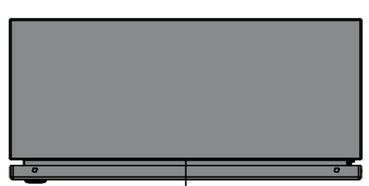

BOTTOM

SEE BILL OF MATERIAL ON LAST PAGE

No.	Revisions	Date	By/Par

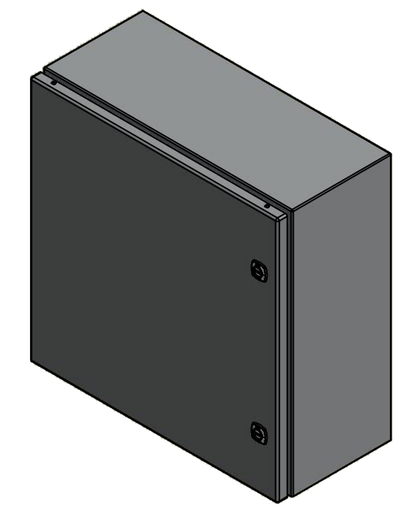

Isometric View

Tél: (450) 979-4373
Fax: (450) 979-4626
www.exmweb.com

Flatness / Aplatissement: Max 3.0mm

Projection

Customer / Client		Date	
Drawn By / Dessiné Par	BoxCad: BoxCad	Date	6/16/2022
Material / Matière	16 Ga Stainless Steel 304 (1.4mm)		
Color / Couleur	Asa-61 Grey	Finish / Fini	Smooth
Description	5412ESSP 20" x 20" x 8" Assembly	Detail Rev.	
Part Number / Numéro Pièce	**5412ESSP202008NOIP**	Rev.	**0**

This drawing is confidential and must not be reproduced or used without the consent of EXM

Ce dessin est confidentiel et ne doit pas être reproduit ou utilisé sans le consentement de EXM

NOTE

ITEM	DESCRIPTION
1	NEMA 4X Enclosure
2	C/W Standard ground studs on box and cover
3	C/W Standard door stiffener
4	W/O Inner panel
5	C/W Standard inner panel mounting studs

No.	Revisions	Date	By/Par

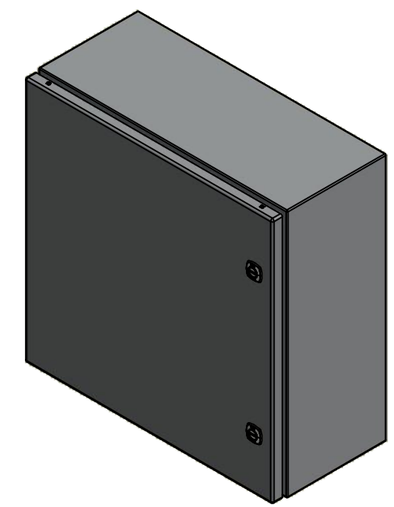

Isometric View

Tél: (450) 979-4373
Fax: (450) 979-4626
www.exmweb.com

Flatness / Aplatissement: Max 3.0mm

Projection

Customer / Client		Date	
Drawn By / Dessiné Par	BoxCad: BoxCad	Date	6/16/2022
Material / Matière	16 Ga Stainless Steel 304 (1.4mm)		
Color / Couleur	Asa-61 Grey	Finish / Fini	Smooth
Description	5412ESSP 20" x 20" x 8" Assembly	Detail Rev.	
Part Number / Numéro Pièce	**5412ESSP202008NOIP**	Rev. **0**	2 / 9

PACKING

ITEM	QTY	DESCRIPTION
Cardboard sleeve	2	Top and Bottom
Cardboard strip	2	Between back of enclosure and inner panel
Plastic bag	1	To protect cover surface and inside gasket
Plastic strap - Black	2	To Squeeze the 2 cardboard sleeve together
Packaging label	1	White label with product number

Parts List

Qty	Part Number	Rev	Description
1	880 PP	6	Self Adhesive Print Pocket
1	STK-K-01800	5	5412 ES Accessory Kit
1	5412ESSP202008NOIPC	0	5412ESSP 20" x 20" Cover
1	5412ESSP202008NOIPB	0	5412ESSP 20" x 20" x 8" Body
2	STK-Q-04051-07	8	M6 x 7mm Stainless Steel Hexagon Socket Head Machine Screw with Nyseal

This drawing is confidential and must not be reproduced or used without the consent of EXM

Ce dessin est confidentiel et ne doit pas être reproduit ou utilisé sans le consentement de EXM

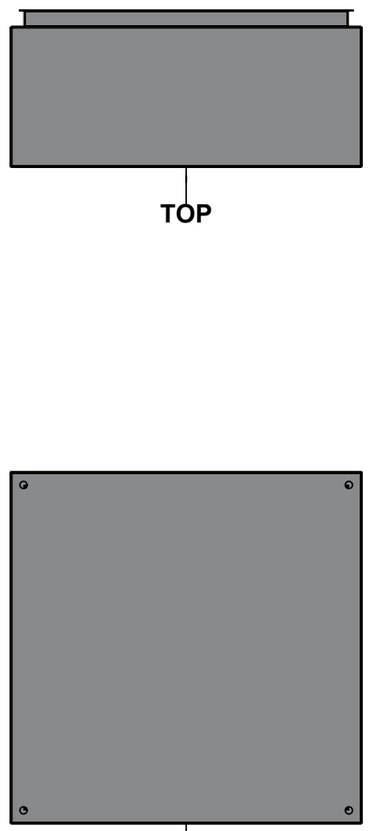

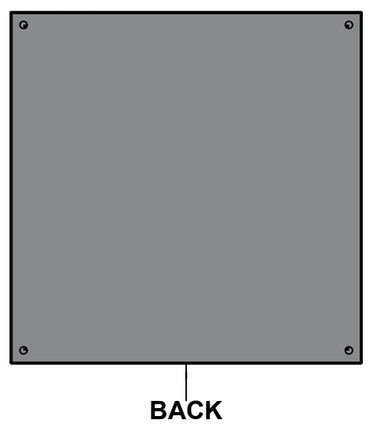

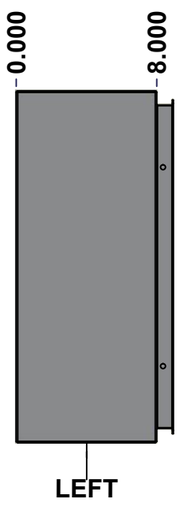

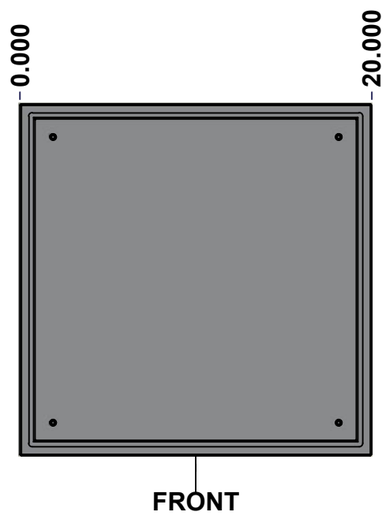

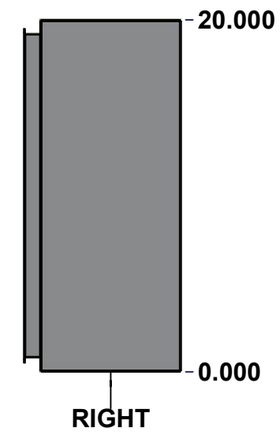

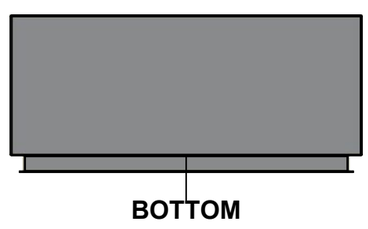

SEE BILL OF MATERIAL ON LAST PAGE

No.	Revisions	Date	By/Par

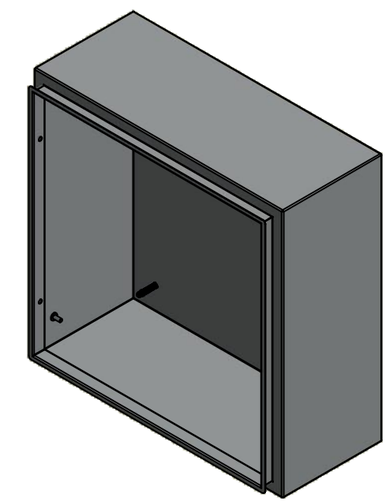

Isometric View

Tél: (450) 979-4373
Fax: (450) 979-4626
www.exmweb.com

Flatness / Aplatissement: Max 3.0mm

Projection

Customer / Client		Date	
Drawn By / Dessiné Par	BoxCad: BoxCad	Date	6/16/2022
Material / Matière	16 Ga Stainless Steel 304 (1.4mm)		
Color / Couleur	Asa-61 Grey	Finish / Fini	Smooth
Description	5412ESSP 20" x 20" x 8" Body	Detail Rev.	
Part Number / Numéro Pièce	**5412ESSP202008NOIPB**	Rev.	**0**

This drawing is confidential and must not be reproduced or used without the consent of EXM

Ce dessin est confidentiel et ne doit pas être reproduit ou utilisé sans le consentement de EXM

STANDARD FEATURES ARE NOT LISTED IN THIS HOLE TABLE

HOLE TABLE - LEFT VIEW (CUSTOM FEATURE ONLY)

CUT-OUT	XDIM	YDIM	DESCRIPTION
1	6.500	2.000	GND STUD M6 x 16mm (Inside)

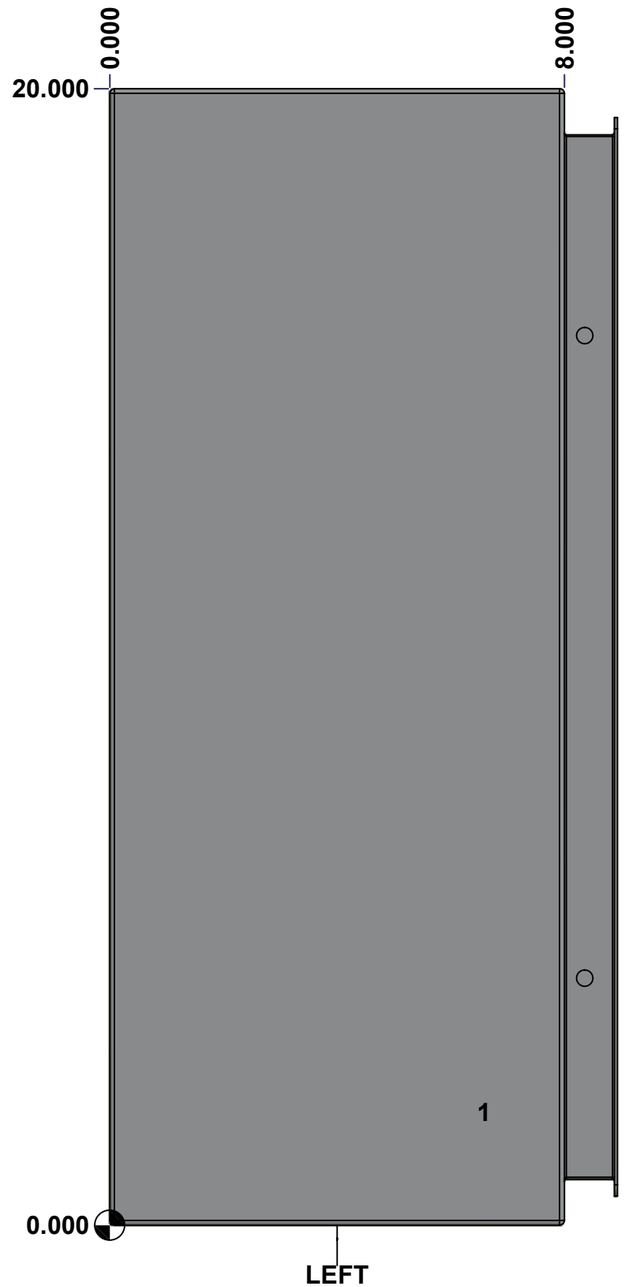

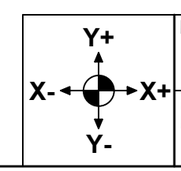

Description	Status
5412ESSP 20" x 20" x 8" Body	(NULL)

Part Number / Numéro Pièce	Rev.	
5412ESSP202008NOIPB	**0**	4 / 9

This drawing is confidential and must not be reproduced or used without the consent of EXM

Ce dessin est confidentiel et ne doit pas être reproduit ou utilisé sans le consentement de EXM

STANDARD FEATURES ARE NOT LISTED IN THIS HOLE TABLE

HOLE TABLE - BACK VIEW (CUSTOM FEATURE ONLY)

CUT-OUT	XDIM	YDIM	DESCRIPTION
1	1.875	1.875	IP STUD M8 x 35mm (Inside)
2	1.875	18.125	IP STUD M8 x 35mm (Inside)
3	18.125	18.125	IP STUD M8 x 35mm (Inside)
4	18.125	1.875	IP STUD M8 x 35mm (Inside)
---	---	---	---
5	19.250	0.750	RND Ø0.390
6	19.250	19.250	RND Ø0.390
7	0.750	19.250	RND Ø0.390
8	0.750	0.750	RND Ø0.390

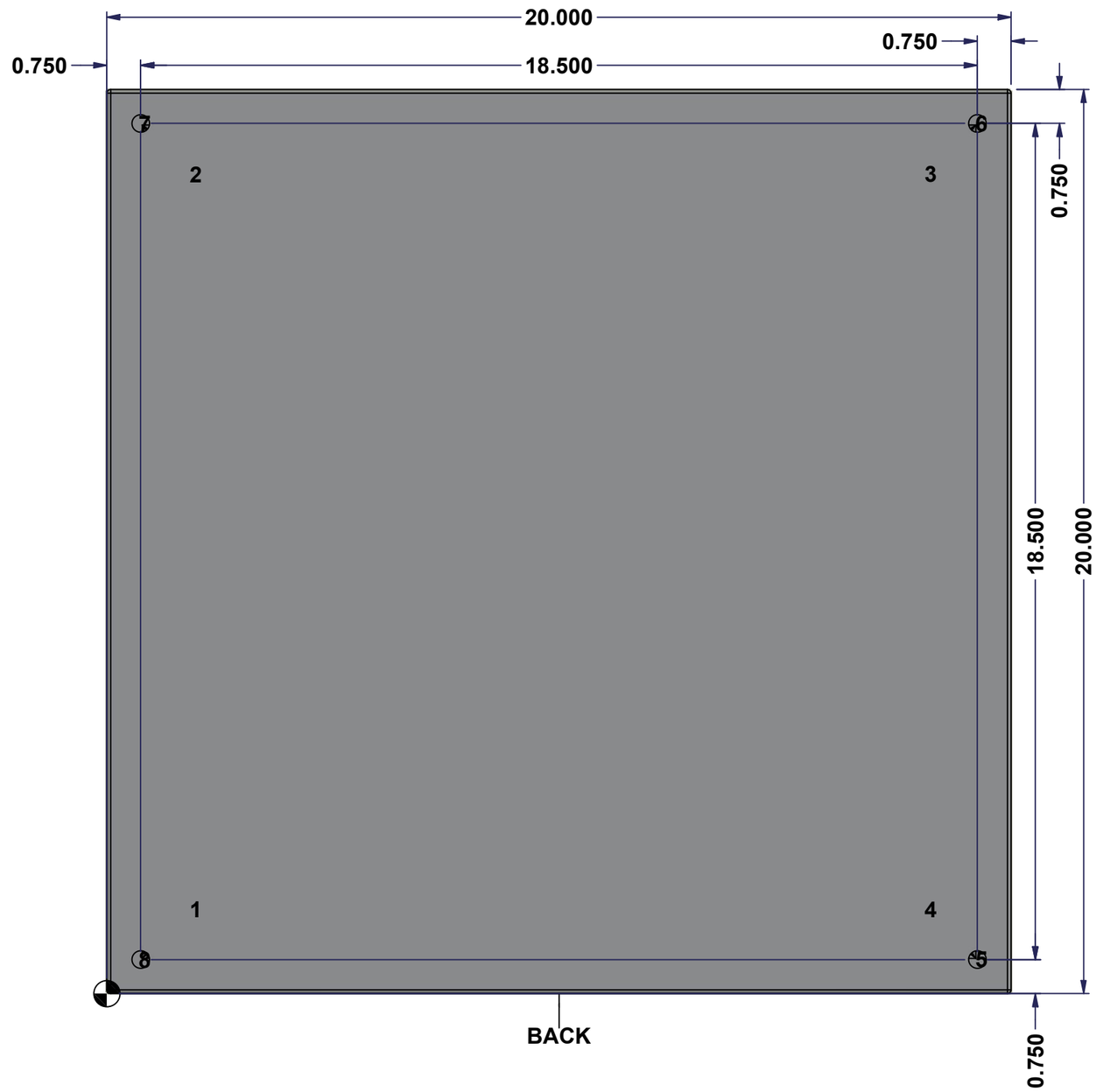

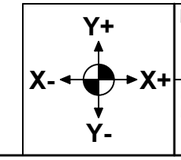

Description	Status
5412ESSP 20" x 20" x 8" Body	(NULL)

Part Number / Numéro Pièce	Rev.	
5412ESSP202008NOIPB	**0**	5 / 9

This drawing is confidential and must not be reproduced or used without the consent of EXM
Ce dessin est confidentiel et ne doit pas être reproduit ou utilisé sans le consentement de EXM

No.	Revisions	Date	By/Par

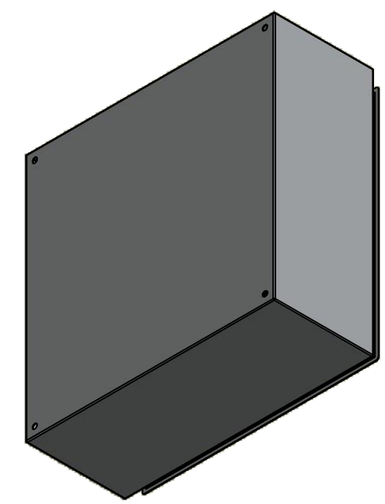

Isometric View

Tél: (450) 979-4373
Fax: (450) 979-4626
www.exmweb.com

Flatness
Aplatissement
Max 3.0mm

Projection

Customer Client		Date	
Drawn By Dessiné Par	BoxCad: BoxCad	Date	6/16/2022
Material Matière	16 Ga Stainless Steel 304 (1.4mm)		
Color Couleur	Asa-61 Grey	Finish Fini	Smooth
Description	5412ESSP 20" x 20" x 8" Body	Detail Rev.	
Part Number Numéro Pièce	**5412ESSP202008NOIPB**	Rev. **0**	6 / 9

Qty	Part Number	Rev	Description
1	STK-Q-16085	0	Ground Stud M6 x 16mm Stainless Steel
1	STK-P-02400S	0	Powder Paint (Asa-61 Grey / Smooth)
4	STK-Q-16020	1	Stud M8 x 35mm Stainless Steel
1	5412ESSP202008NOIPB-P	0	5412ESSP 20" x 20" x 8" Body Part

Parts List

This drawing is confidential and must not be reproduced or used without the consent of EXM

Ce dessin est confidentiel et ne doit pas être reproduit ou utilisé sans le consentement de EXM

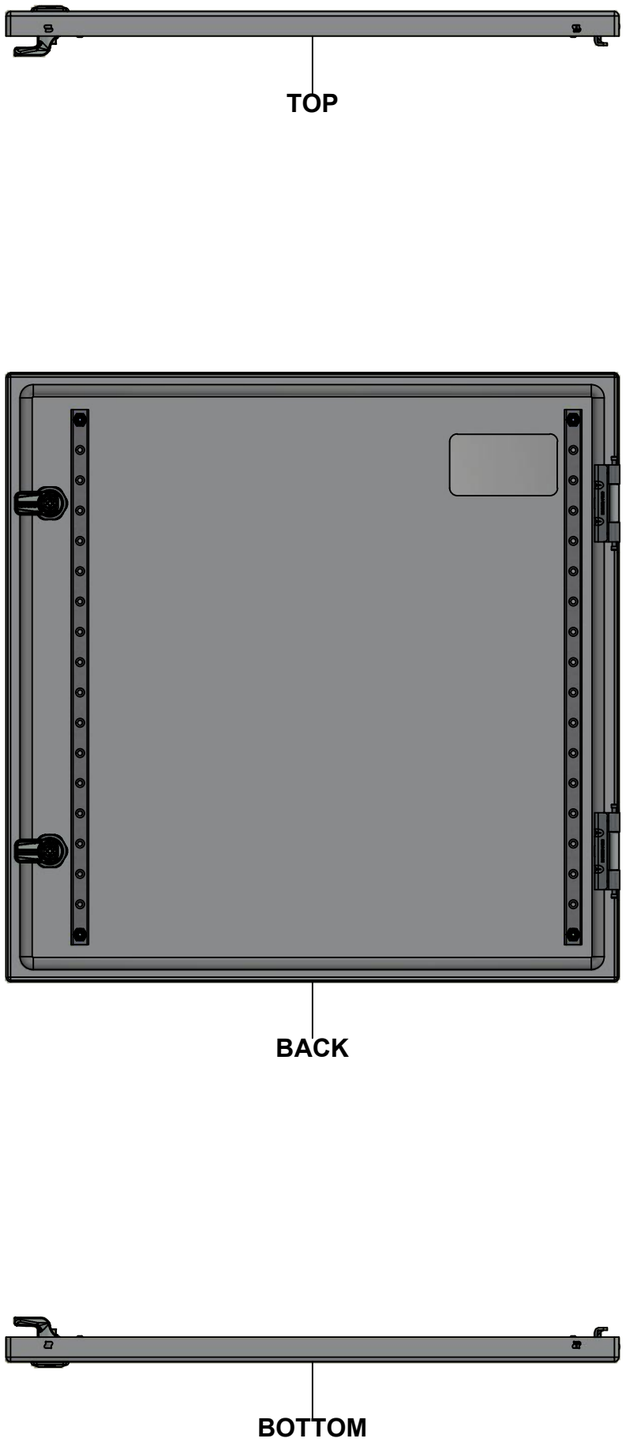

SEE BILL OF MATERIAL ON LAST PAGE

No.	Revisions	Date	By/Par

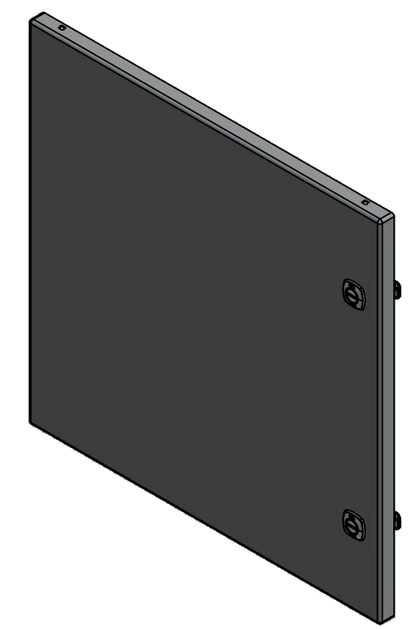

Isometric View

Tél: (450) 979-4373
Fax: (450) 979-4626
www.exmweb.com

Flatness / Aplatissement: Max 3.0mm

Projection

Customer / Client		Date	
Drawn By / Dessiné Par	BoxCad: BoxCad	Date	6/16/2022
Material / Matière	16 Ga Stainless Steel 304 (1.4mm)		
Color / Couleur	Asa-61 Grey	Finish / Fini	Smooth
Description	5412ESSP 20" x 20" Cover	Detail Rev.	
Part Number / Numéro Pièce	5412ESSP202008NOIPC	Rev.	0

This drawing is confidential and must not be reproduced or used without the consent of EXM

Ce dessin est confidentiel et ne doit pas être reproduit ou utilisé sans le consentement de EXM

STANDARD FEATURES ARE NOT LISTED IN THIS HOLE TABLE

HOLE TABLE - FRONT VIEW (CUSTOM FEATURE ONLY)

CUT-OUT	XDIM	YDIM	DESCRIPTION
1	1.486	1.535	STUD M6 x 18mm (Inside)
2	1.486	18.268	STUD M6 x 18mm (Inside)
3	17.517	18.268	STUD M6 x 18mm (Inside)
4	17.517	1.535	STUD M6 x 18mm (Inside)
---	---	---	---
5	3.750	16.803	LABEL_EXM (Inside)
6	18.494	15.553	LOCK 880 SCQ4-SLSS6 @ 0.0°
7	18.494	4.250	LOCK 880 SCQ4-SLSS6 @ 0.0°

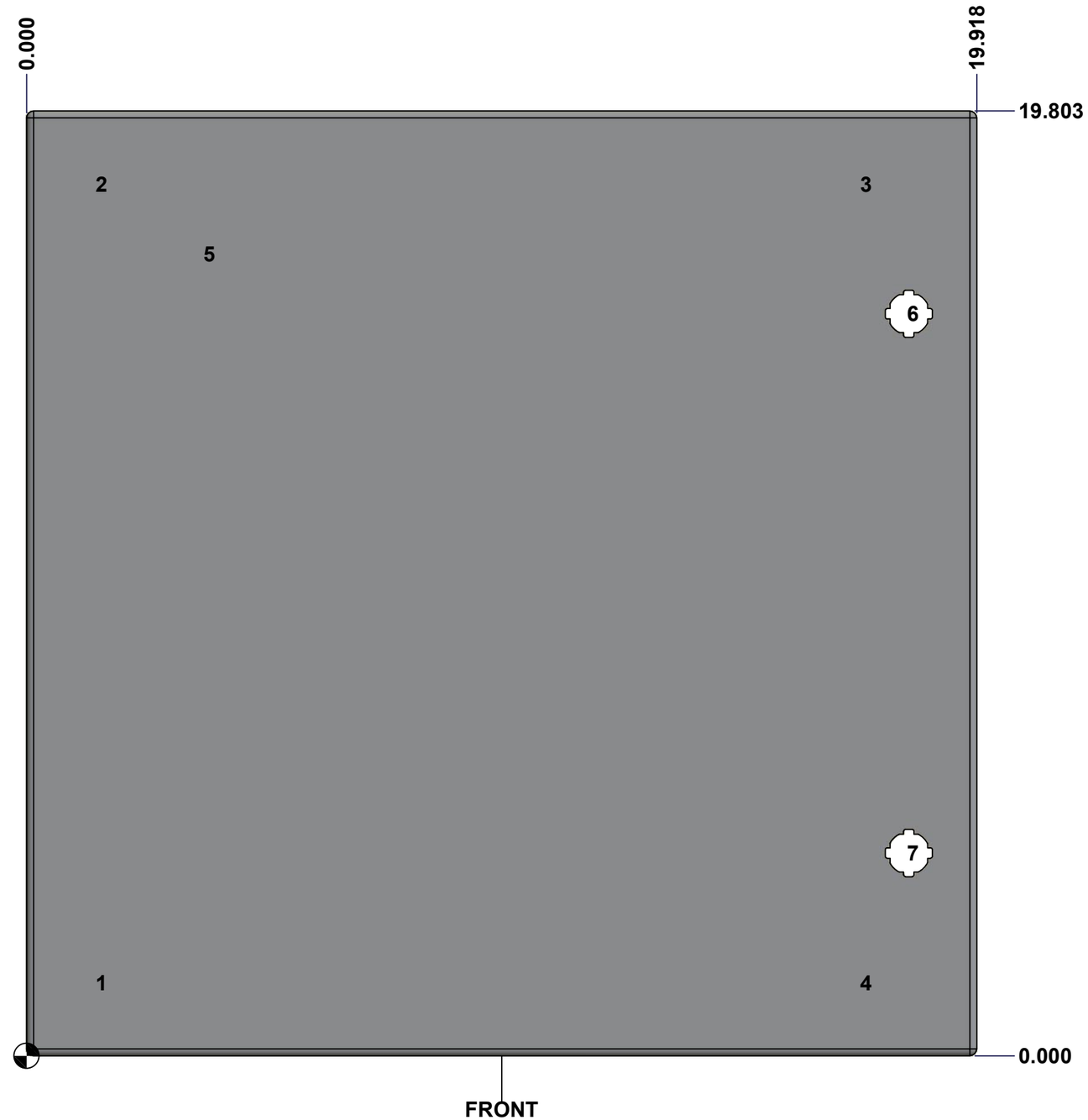

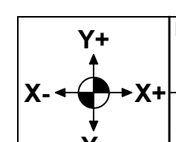

Description	Status
5412ESSP 20" x 20" Cover	(NULL)
Part Number / Numéro Pièce: **5412ESSP202008NOIPC**	Rev. **0**

Tolerance ±1/32" unless otherwise specified

C:\Vault_Workspace\Inventor_Dwg\BoxCad\Result\5412ESSP202008NOIP\5412ESSP202008NOIP.idw

Tolérance ±1/32" sauf spécification contraire

This drawing is confidential and must not be reproduced or used without the consent of EXM

Ce dessin est confidentiel et ne doit pas être reproduit ou utilisé sans le consentement de EXM

No.	Revisions	Date	By/Par

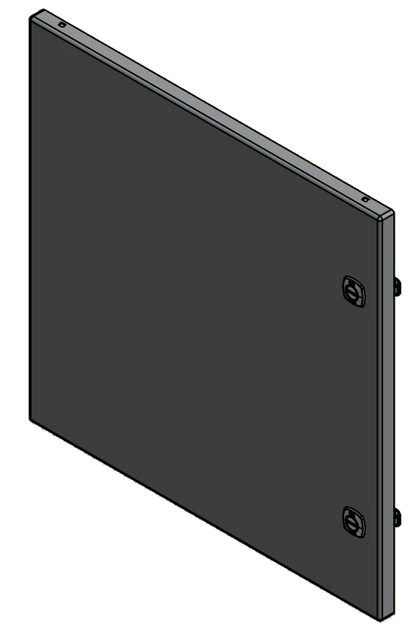

Isometric View

Tél: (450) 979-4373
Fax: (450) 979-4626
www.exmweb.com

Flatness
Aplatissement
Max 3.0mm

Projection

Parts List			
Qty	Part Name	Rev	Description
1	STK-S-00100	0	3.5" x 2" Silver Milar Flexcon Sticker
1	STK-P-02400S	0	Powder Paint (Asa-61 Grey / Smooth)
2	STK-Q-46020-20	5	5412 ES Vertical Door Stiffener 20"
4	STK-Q-16070	1	Stud M6 x 18mm Stainless steel
1	5412ESSP202008NOIPG	0	5412ESSP 20" x 20" Cover Gasket Part
1	5412ESSP202008NOIPC-P	0	5412ESSP 20" x 20" Cover Part
2	STK-A-33016	0	5412 ESS Bended Hinge (Body Part)
2	880 SCQ4-SLSS6	7	5412 ESS 1/4 Turn Lock
4	STK-Q-07220	1	M6 Nylon Insert Lock Nut

Customer / Client	Date
Drawn By / Dessiné Par: BoxCad: BoxCad	Date: 6/16/2022
Material / Matière: 16 Ga Stainless Steel 304 (1.4mm)	
Color / Couleur: Asa-61 Grey	Finish / Fini: Smooth
Description: 5412ESSP 20" x 20" Cover	Detail Rev.
Part Number / Numéro Pièce: **5412ESSP202008NOIPC**	Rev. **0**

9 / 9