Tolerance ±0.8mm unless otherwise specified

C:\Vault_Workspace\Inventor_Dwg\BoxCad\Result\6500CO0804\6500CO0804.idw

Tolérance ±0.8mm sauf spécification contraire

This drawing is confidential and must not be reproduced or used without the consent of EXM

Ce dessin est confidentiel et ne doit pas être reproduit ou utilisé sans le consentement de EXM

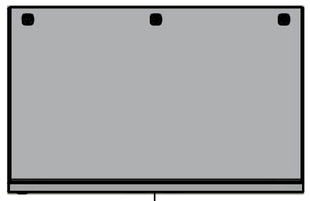

TOP

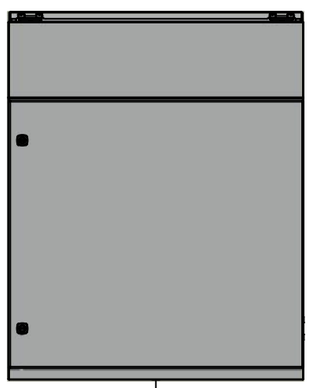

BACK

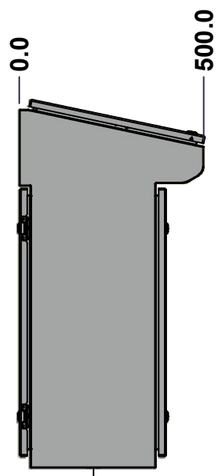

LEFT

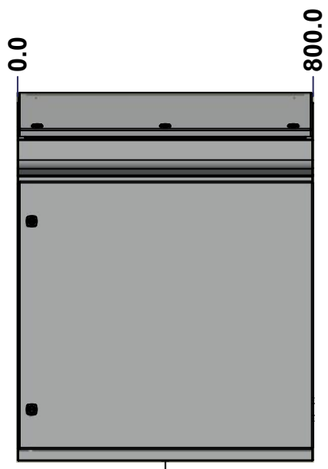

FRONT

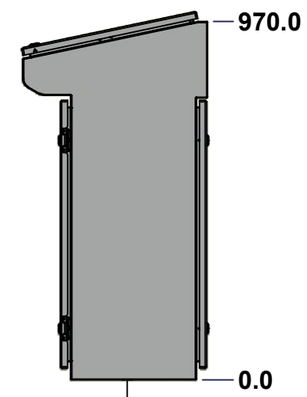

RIGHT

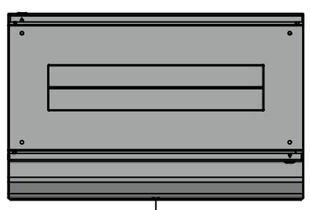

BOTTOM

SEE BILL OF MATERIAL ON LAST PAGE

No.	Revisions	Date	By/Par

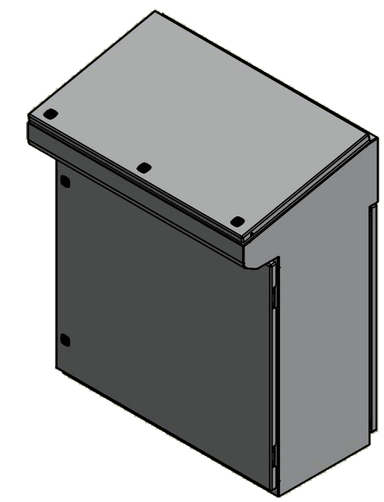

Isometric View

Tél: (450) 979-4373
Fax: (450) 979-4626
www.exmweb.com

Flatness / Aplatissement: Max 3.0mm

Projection

Customer / Client		Date	
Drawn By / Dessiné Par	BoxCad: BoxCad	Date	11/4/2014
Material / Matière	14 Ga Cold Rolled A1008 CS Type B (1.7mm)		
Color / Couleur	Light Grey RAL7035	Finish / Fini	Rough Textured
Description	6500CO 1000mm x 800mm x 400mm Assembly	Detail Rev.	
Part Number / Numéro Pièce	**6500CO0804**	Rev. **0**	1 / 17

Tolerance ±0.8mm unless otherwise specified

C:\Vault_Workspace\Inventor_Dwg\BoxCad\Result\6500CO0804\6500CO0804.idw

Tolérance ±0.8mm sauf spécification contraire

This drawing is confidential and must not be reproduced or used without the consent of EXM

Ce dessin est confidentiel et ne doit pas être reproduit ou utilisé sans le consentement de EXM

NOTE

ITEM	DESCRIPTION
1	NEMA 12/13 Enclosure
2	C/W Standard ground studs on box and cover
3	C/W Standard door stiffener
4	C/W Standard inner panel (Included)
5	C/W Standard inner panel mounting studs

No.	Revisions	Date	By/Par

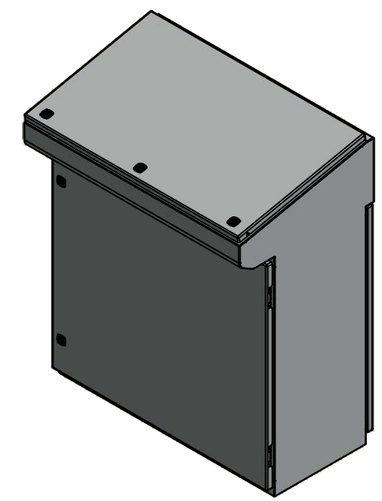

Isometric View

PACKING

ITEM	QTY	DESCRIPTION
Cardboard corner	2	To reinforced for the plastic strap tightening
Honeycomb angle	4	To protect each corners
Plastic strap- Green	2	To secure the enclosure to the wood pallet
Wood pallet	1	Standard wood pallet
Flat cardboard	1	Between the enclosure and the wood pallet
Packaging label	1	White label with product number

Parts List

Qty	Part Number	Rev	Description
4	STK-Q-00700	2	M8 x 12mm Hex Socket Cap Screw (DIN 6912)
1	886SP0800CO	0	886 SP - Inner Panel
8	STK-Q-05025	1	M5 x 9.5mm Thread Rolling Screw
2	880 GS115	0	Gas Spring 115N/12Kg/26Lbs
1	6500CO0804BD	0	6500CO 1000mm x 800mm Back Cover
1	6500CO0804FD	0	6500CO 1000mm x 800mmFront Cover
1	6500CO0804TD	0	6500CO 800mm x 400mmTop Cover
1	6500CO0804B	0	6500CO 1000mm x 800mm x 400mm Body
6	STK-Q-04050-07	7	M6 x 7mm Hexagon Socket Head Machine Screw with Nyseal
4	STK-Q-08100	1	M5 Nylon Insert Lock Nut

Tél: (450) 979-4373
Fax: (450) 979-4626
www.exmweb.com

Flatness / Aplatissement: Max 3.0mm

Projection

Customer / Client		Date	
Drawn By / Dessiné Par	BoxCad: BoxCad	Date	11/4/2014
Material / Matière	14 Ga Cold Rolled A1008 CS Type B (1.7mm)		
Color / Couleur	Light Grey RAL7035	Finish / Fini	Rough Textured
Description	6500CO 1000mm x 800mm x 400mm Assembly	Detail Rev.	
Part Number / Numéro Pièce	**6500CO0804**	Rev. **0**	2 / 17

This drawing is confidential and must not be reproduced or used without the consent of EXM

Ce dessin est confidentiel et ne doit pas être reproduit ou utilisé sans le consentement de EXM

TOP

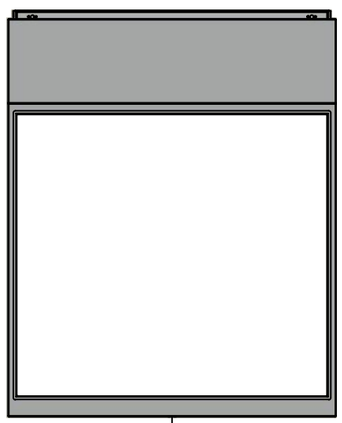

BACK

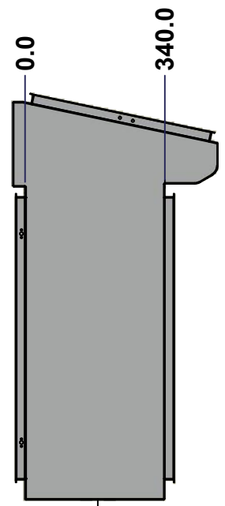

LEFT

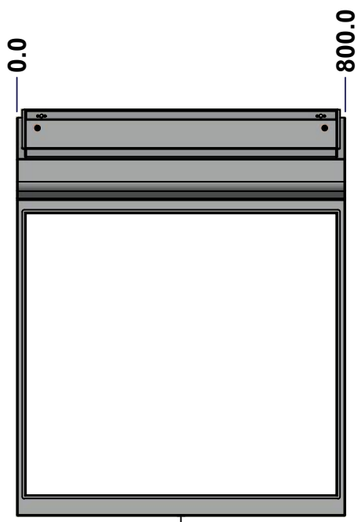

FRONT

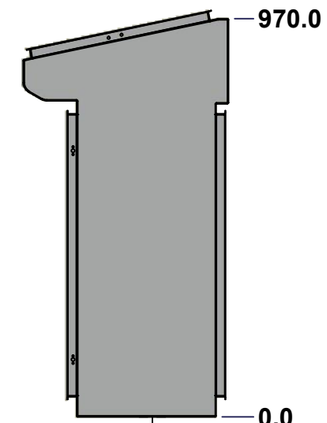

RIGHT

BOTTOM

SEE BILL OF MATERIAL ON LAST PAGE

No.	Revisions	Date	By/Par

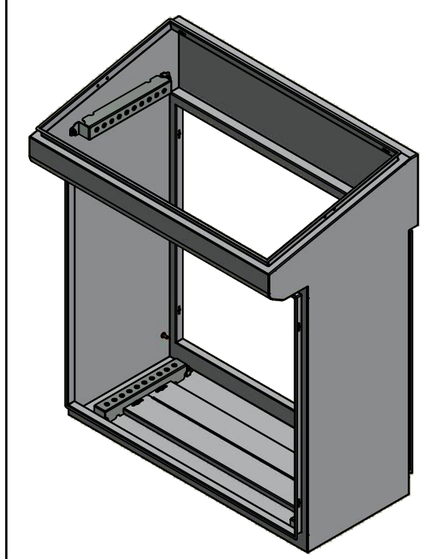

Isometric View

Tél: (450) 979-4373
Fax: (450) 979-4626
www.exmweb.com

Flatness
Aplatissement
Max 3.0mm

Projection

Customer Client		Date	
Drawn By Dessiné Par	BoxCad: BoxCad	Date	11/4/2014
Material Matière	14 Ga Cold Rolled A1008 CS Type B (1.7mm)		
Color Couleur	Light Grey RAL7035	Finish Fini	Rough Textured
Description 6500CO 1000mm x 800mm x 400mm Body		Detail Rev.	
Part Number Numéro Pièce **6500CO0804B**		Rev. **0**	3 / 17

This drawing is confidential and must not be reproduced or used without the consent of EXM

Ce dessin est confidentiel et ne doit pas être reproduit ou utilisé sans le consentement de EXM

STANDARD FEATURES ARE NOT LISTED IN THIS HOLE TABLE

HOLE TABLE - RIGHT VIEW (CUSTOM FEATURE ONLY)

CUT-OUT	XDIM	YDIM	DESCRIPTION
1	42.5	815.4	STUD M6 x 18mm (Inside)
2	357.5	815.4	STUD M6 x 18mm (Inside)
---	---	---	---
3	343.3	75.0	GND STUD M6 x 16mm (Inside)

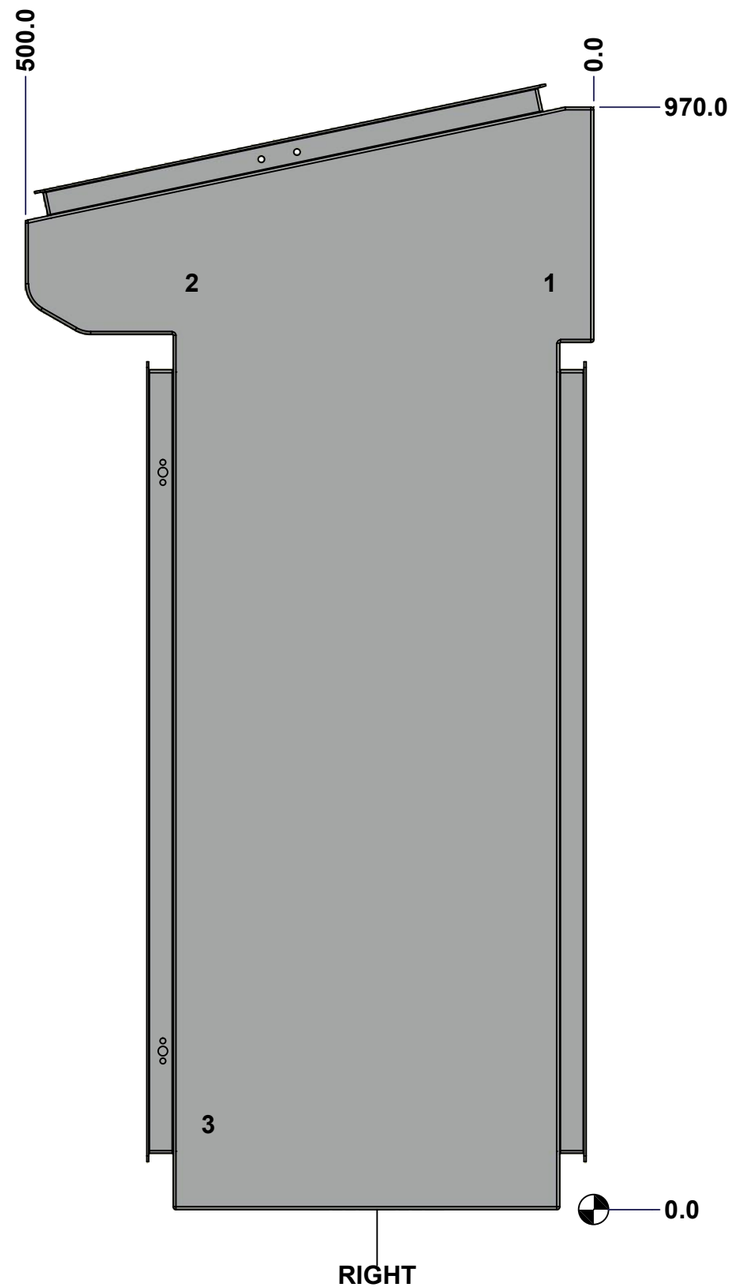

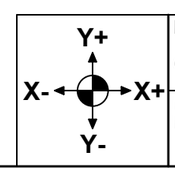

Description	Status
6500CO 1000mm x 800mm x 400mm Body	(NULL)
Part Number / Numéro Pièce: **6500CO0804B**	Rev. **0**

This drawing is confidential and must not be reproduced or used without the consent of EXM

Ce dessin est confidentiel et ne doit pas être reproduit ou utilisé sans le consentement de EXM

STANDARD FEATURES ARE NOT LISTED IN THIS HOLE TABLE

HOLE TABLE - BOTTOM VIEW (CUSTOM FEATURE ONLY)

CUT-OUT	XDIM	YDIM	DESCRIPTION
1	72.5	12.5	RAIL STUD M6 x 18mm (Inside)
2	72.5	170.0	RAIL STUD M6 x 18mm (Inside)
3	727.5	12.5	RAIL STUD M6 x 18mm (Inside)
4	727.5	170.0	RAIL STUD M6 x 18mm (Inside)

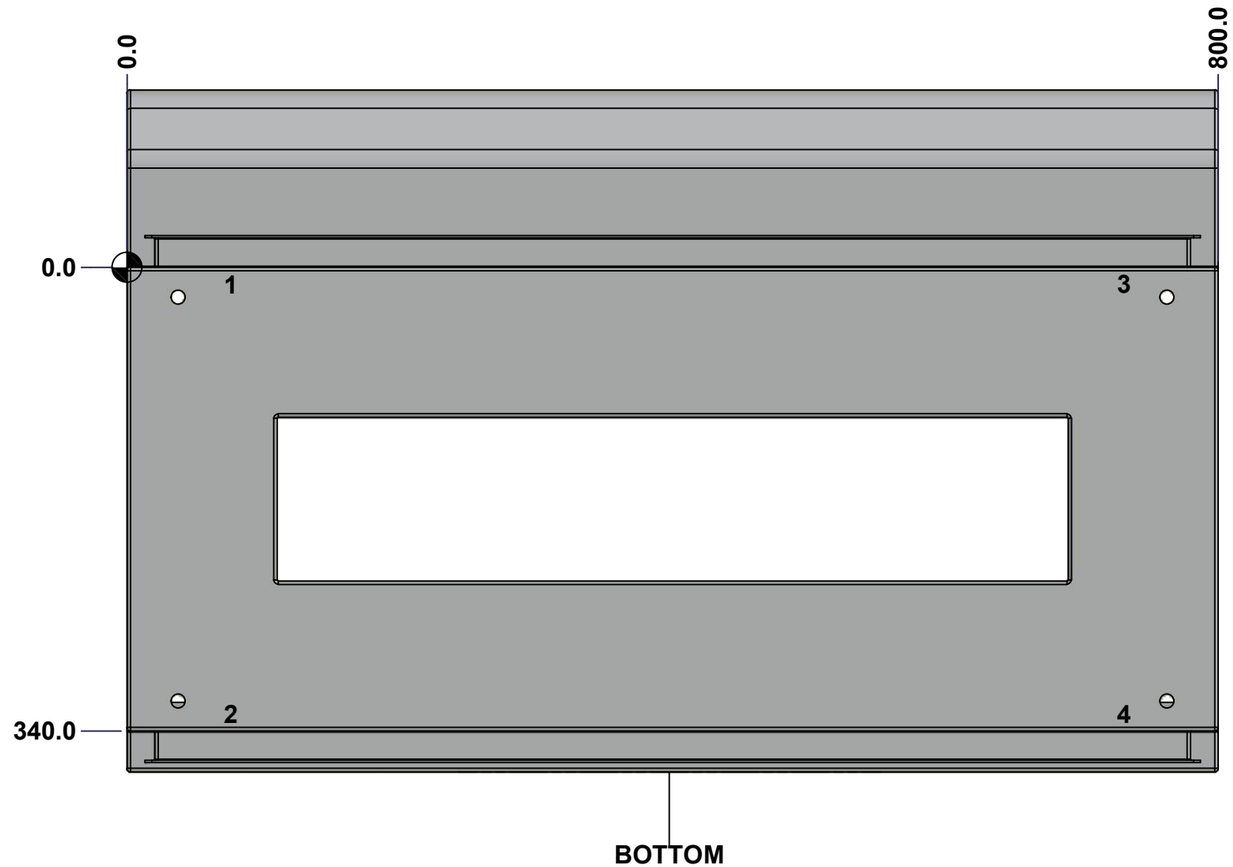

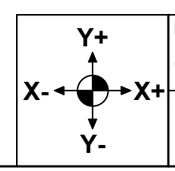

Description	Status
6500CO 1000mm x 800mm x 400mm Body	(NULL)
Part Number / Numéro Pièce: **6500CO0804B**	Rev. **0**

This drawing is confidential and must not be reproduced or used without the consent of EXM

Ce dessin est confidentiel et ne doit pas être reproduit ou utilisé sans le consentement de EXM

STANDARD FEATURES ARE NOT LISTED IN THIS HOLE TABLE

HOLE TABLE - LEFT VIEW (CUSTOM FEATURE ONLY)

CUT-OUT	XDIM	YDIM	DESCRIPTION
1	42.5	815.4	STUD M6 x 18mm (Inside)
2	357.5	815.4	STUD M6 x 18mm (Inside)
---	---	---	---
3	53.3	75.0	GND STUD M6 x 16mm (Inside)

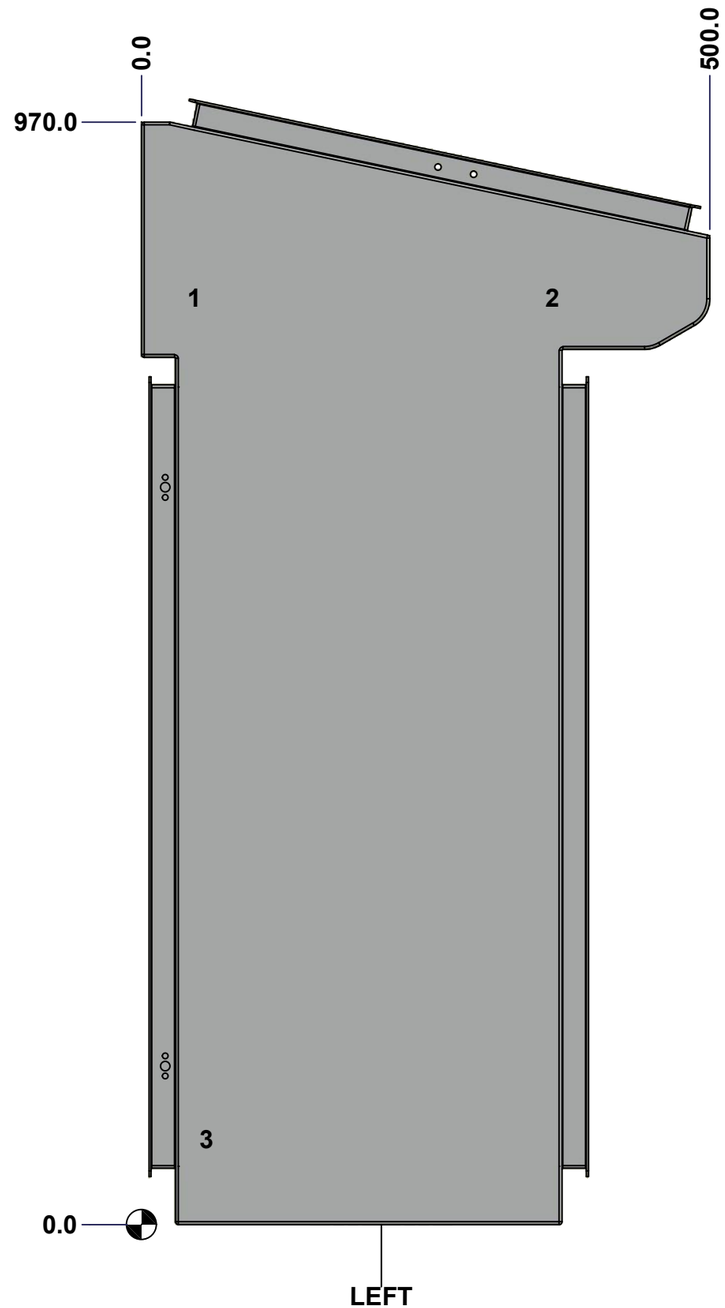

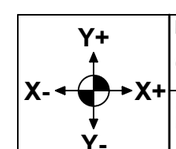

Description	Status
6500CO 1000mm x 800mm x 400mm Body	(NULL)
Part Number / Numéro Pièce: **6500CO0804B**	Rev. **0**

This drawing is confidential and must not be reproduced or used without the consent of EXM

Ce dessin est confidentiel et ne doit pas être reproduit ou utilisé sans le consentement de EXM

STANDARD FEATURES ARE NOT LISTED IN THIS HOLE TABLE

HOLE TABLE - BACK VIEW (CUSTOM FEATURE ONLY)

CUT-OUT	XDIM	YDIM	DESCRIPTION
1	50.0	945.0	GND STUD M6 x 16mm (Inside)
2	750.0	945.0	GND STUD M6 x 16mm (Inside)

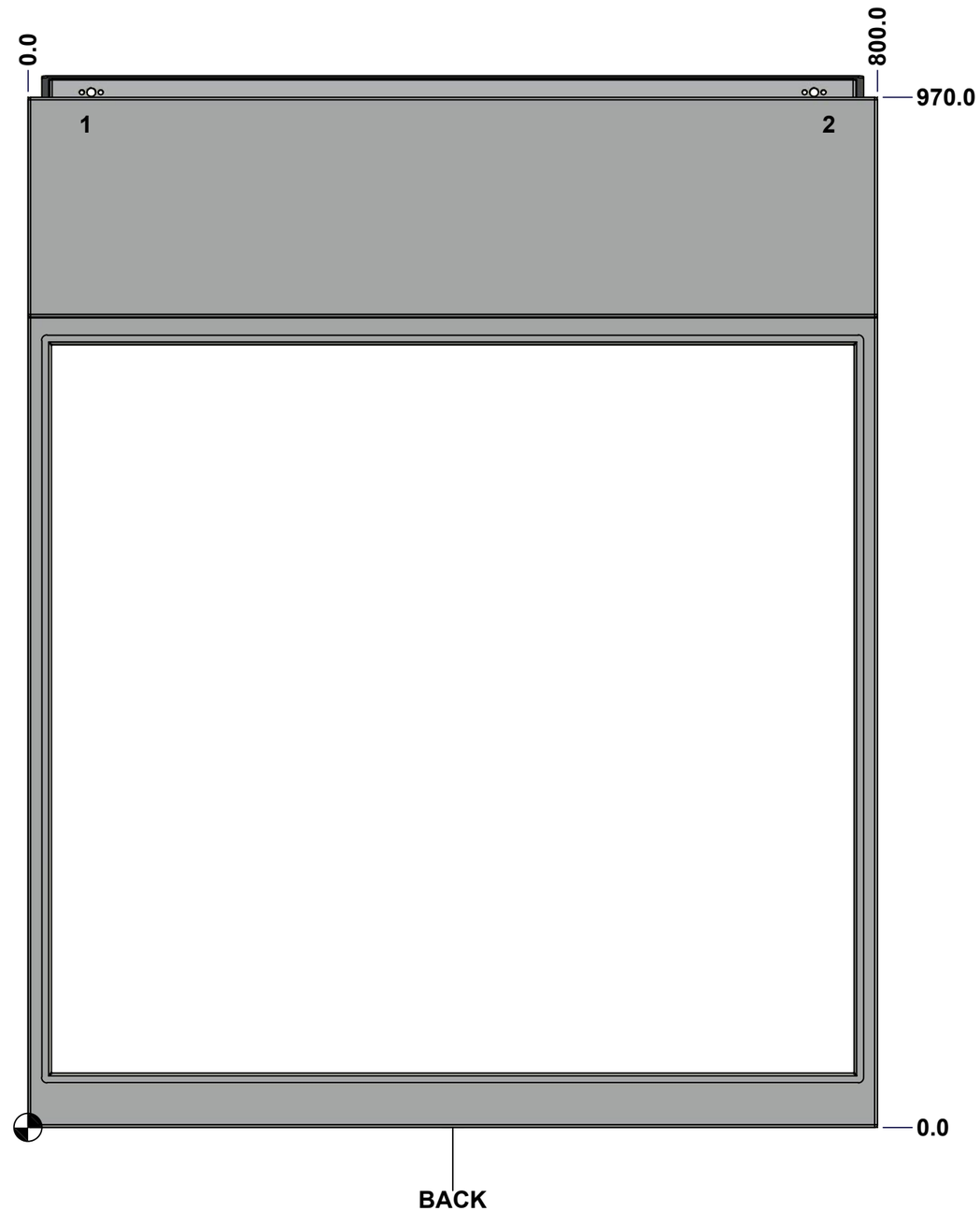

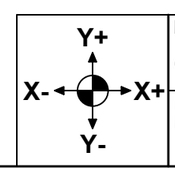

Description	Status
6500CO 1000mm x 800mm x 400mm Body	(NULL)
Part Number / Numéro Pièce: **6500CO0804B**	Rev. **0**

Tolerance ±0.8mm unless otherwise specified

C:\Vault_Workspace\Inventor_Dwg\BoxCad\Result\6500CO0804\6500CO0804.idw

Tolérance ±0.8mm sauf spécification contraire

This drawing is confidential and must not be reproduced or used without the consent of EXM

Ce dessin est confidentiel et ne doit pas être reproduit ou utilisé sans le consentement de EXM

No.	Revisions	Date	By/Par

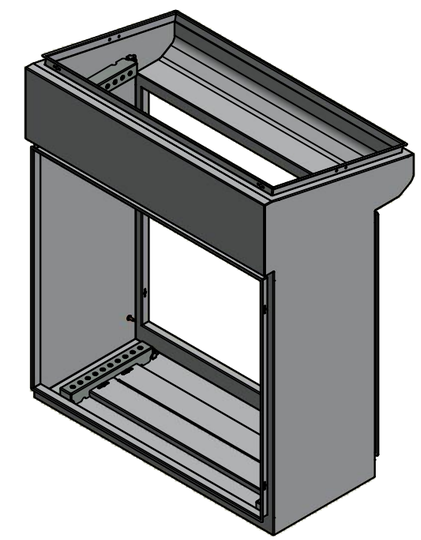

Isometric View

Tél: (450) 979-4373
Fax: (450) 979-4626
www.exmweb.com

Flatness
Aplatissement
Max 3.0mm

Projection

Customer
Client

Date

Drawn By
Dessiné Par
BoxCad: BoxCad

Date
11/4/2014

Material
Matière
14 Ga Cold Rolled A1008 CS Type B (1.7mm)

Color
Couleur
Light Grey RAL7035

Finish
Fini
Rough Textured

Description
6500CO 1000mm x 800mm x 400mm Body

Detail Rev.

Part Number
Numéro Pièce
6500CO0804B

Rev.
0

8 / 17

Qty	Part Number	Rev	Description
1	STK-P-03820R	0	Powder Paint (Light Grey / Rough Textured)
4	STK-Q-49090-275	2	Mounting Rail 275.0mm
8	STK-Q-16031	0	M6 x 10mm Stud (No Paint Cap Required)
1	6500CO0804GP	0	6500CO 1000mm x 800mm x 400mm Gland Plate
1	6500CO0804B-P	0	6500CO 1000mm x 800mm x 400mm Body Part
8	STK-Q-07220	1	M6 Nylon Insert Lock Nut
4	STK-Q-16080	0	Ground Stud M6 x 16mm

Parts List

This drawing is confidential and must not be reproduced or used without the consent of EXM

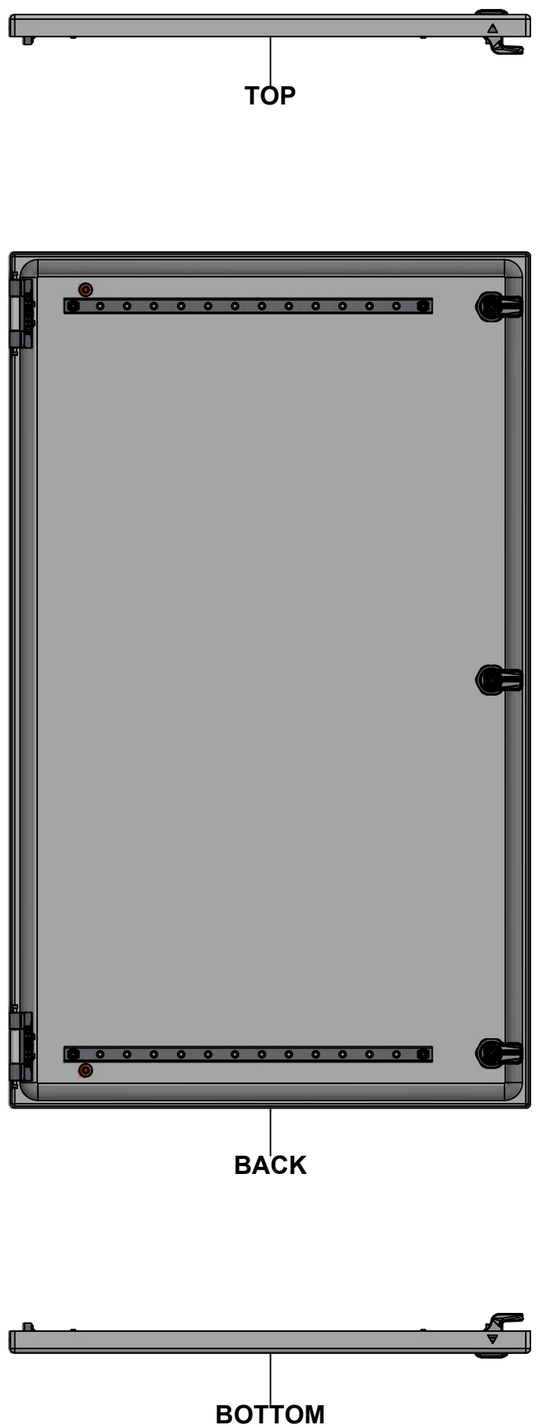

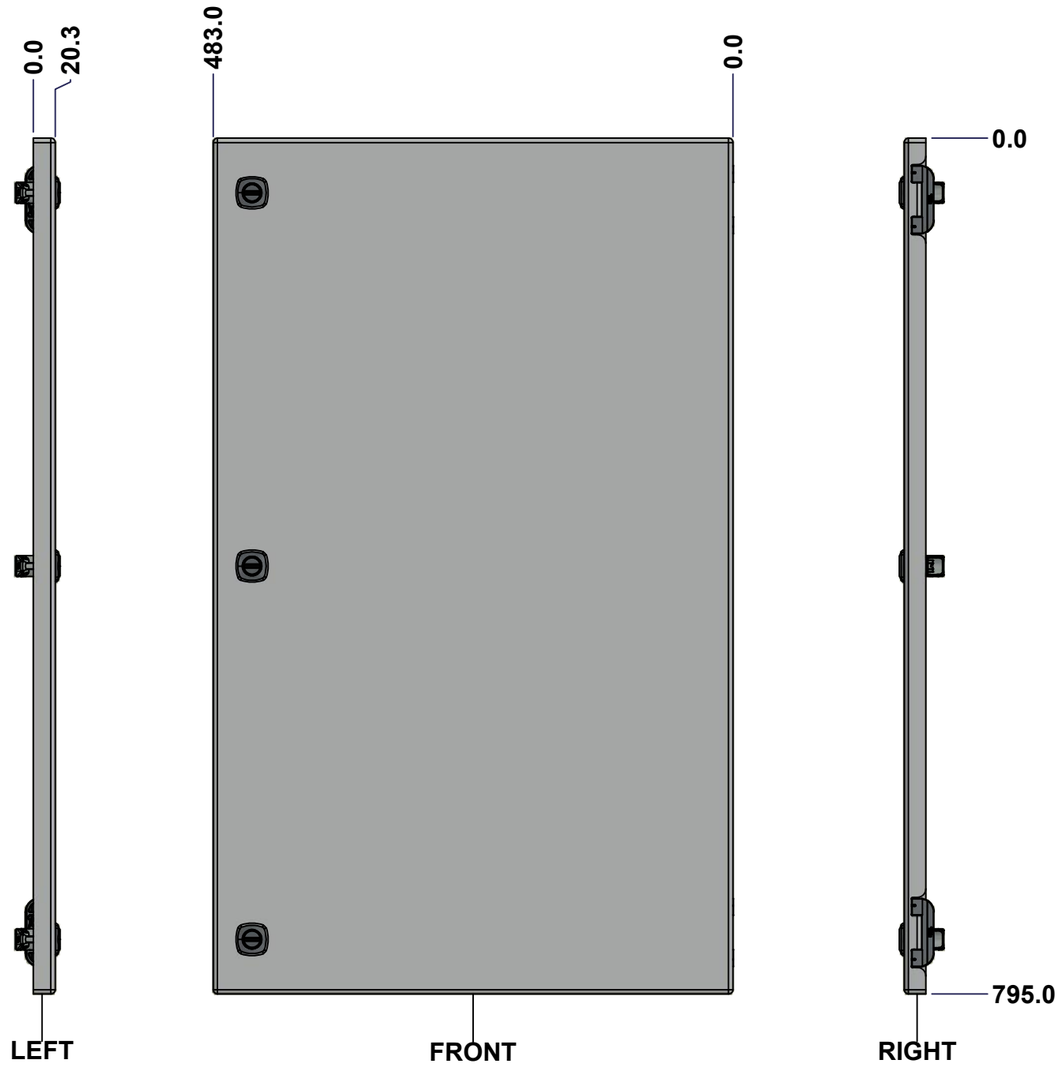

SEE BILL OF MATERIAL ON LAST PAGE

No.	Revisions	Date	By/Par

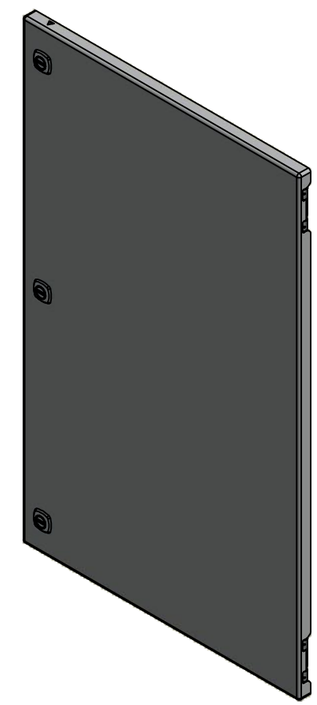

Isometric View

Ce dessin est confidentiel et ne doit pas être reproduit ou utilisé sans le consentement de EXM

Tél: (450) 979-4373
Fax: (450) 979-4626
www.exmweb.com

Flatness / Aplatissement: Max 3.0mm

Projection

Customer / Client		Date	
Drawn By / Dessiné Par	BoxCad: BoxCad	Date	11/4/2014
Material / Matière	14 Ga Cold Rolled A1008 CS Type B (1.7mm)		
Color / Couleur	Light Grey RAL7035	Finish / Fini	Rough Textured
Description	6500CO 800mm x 400mmTop Cover	Detail Rev.	
Part Number / Numéro Pièce	**6500CO0804TD**	Rev.	**0**

This drawing is confidential and must not be reproduced or used without the consent of EXM

Ce dessin est confidentiel et ne doit pas être reproduit ou utilisé sans le consentement de EXM

STANDARD FEATURES ARE NOT LISTED IN THIS HOLE TABLE

HOLE TABLE - FRONT VIEW (CUSTOM FEATURE ONLY)

CUT-OUT	XDIM	YDIM	DESCRIPTION
1	58.6	50.0	STUD M6 x 18mm (Inside)
2	383.6	50.0	STUD M6 x 18mm (Inside)
3	58.6	745.0	STUD M6 x 18mm (Inside)
4	383.6	745.0	STUD M6 x 18mm (Inside)
---	---	---	---
5	70.0	760.0	GND STUD M6 x 16mm (Inside)
6	70.0	35.0	GND STUD M6 x 16mm (Inside)
7	446.8	50.8	LOCK 880 SCQ4-SL @ 270.0°
8	446.8	397.5	LOCK 880 SCQ4-SL @ 270.0°
9	446.8	744.2	LOCK 880 SCQ4-SL @ 270.0°

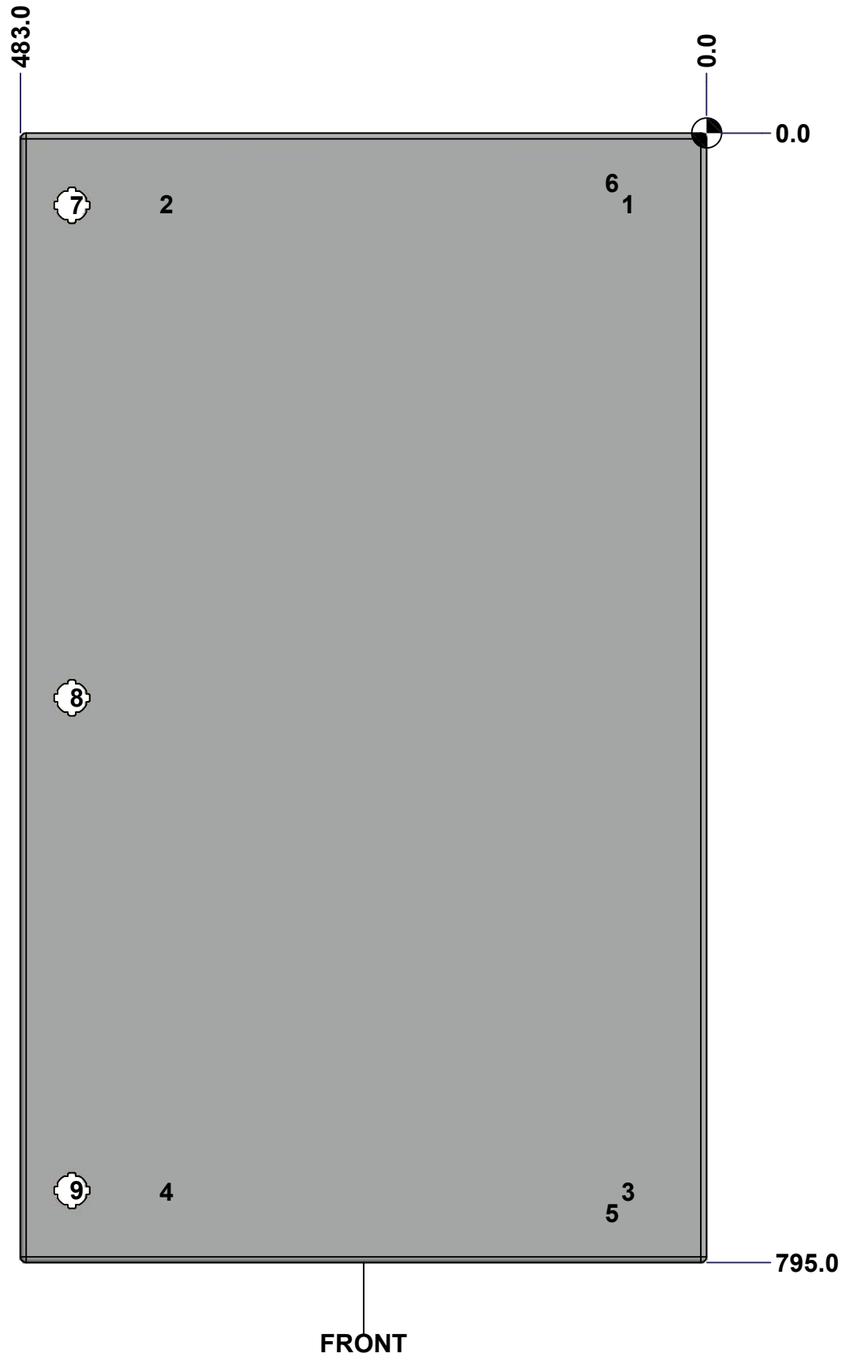

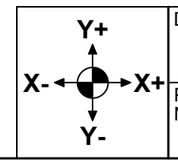

Description	Status
6500CO 800mm x 400mm Top Cover	(NULL)
Part Number / Numéro Pièce: **6500CO0804TD**	Rev. **0**

Tolerance ±0.8mm unless otherwise specified

C:\Vault_Workspace\Inventor_Dwg\BoxCad\Result\6500CO0804\6500CO0804.idw

Tolérance ±0.8mm sauf spécification contraire

This drawing is confidential and must not be reproduced or used without the consent of EXM

Ce dessin est confidentiel et ne doit pas être reproduit ou utilisé sans le consentement de EXM

No.	Revisions	Date	By/Par

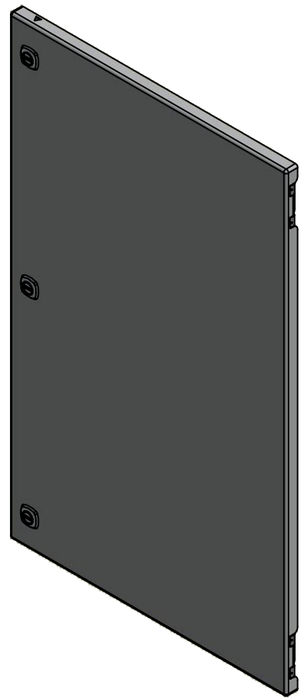

Isometric View

Qty	Part Number	Rev	Description
2	STK-Q-16080	0	Ground Stud M6 x 16mm
1	STK-P-03820R	0	Powder Paint (Light Grey / Rough Textured)
2	STK-Q-46020-16	5	5412 ES Vertical Door Stiffener 16"
4	STK-Q-16055	1	M6 x 18mm Stud (No Paint Cap Required)
1	6500CO0804TD-P	0	6500CO 800mm x 400mm Top Cover Part
1	6500CO0804TD-G	0	6500CO 1000mm x 800mm Top Cover Gasket
2	STK-K-09800	10	5412 ES Hinge with 2 Captive Hinge Pins
4	STK-Q-07220	1	M6 Nylon Insert Lock Nut
3	880 SCQ4-SL	6	5412 ES 1/4 Turn Lock

Parts List

Tél: (450) 979-4373
Fax: (450) 979-4626
www.exmweb.com

Flatness / Aplatissement: Max 3.0mm

Projection

Customer / Client

Date

Drawn By / Dessiné Par: BoxCad: BoxCad

Date: 11/4/2014

Material / Matière: 14 Ga Cold Rolled A1008 CS Type B (1.7mm)

Color / Couleur: Light Grey RAL7035

Finish / Fini: Rough Textured

Description: 6500CO 800mm x 400mmTop Cover

Detail Rev.

Part Number / Numéro Pièce: **6500CO0804TD**

Rev.: **0**

11 / 17

Tolerance ±0.8mm unless otherwise specified

C:\Vault_Workspace\Inventor_Dwg\BoxCad\Result\6500CO0804\6500CO0804.idw

Tolérance ±0.8mm sauf spécification contraire

This drawing is confidential and must not be reproduced or used without the consent of EXM

Ce dessin est confidentiel et ne doit pas être reproduit ou utilisé sans le consentement de EXM

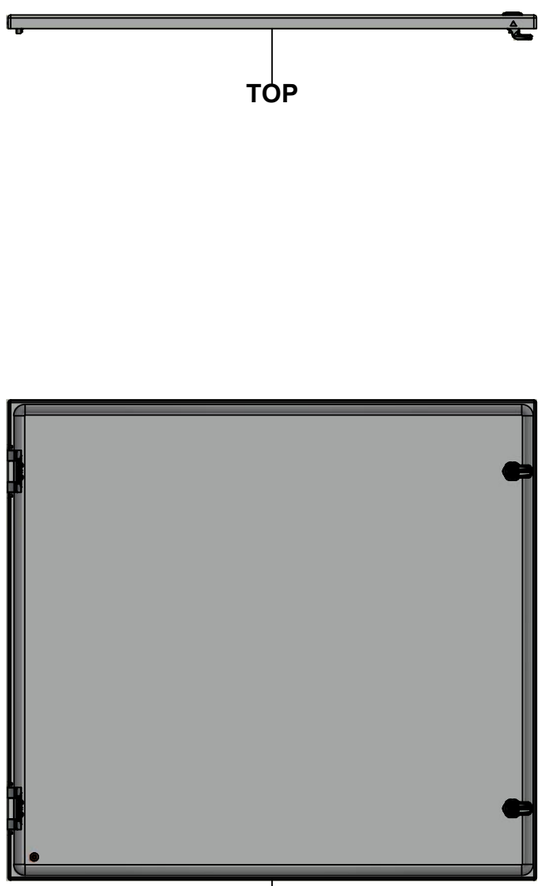

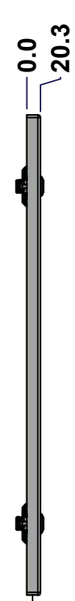

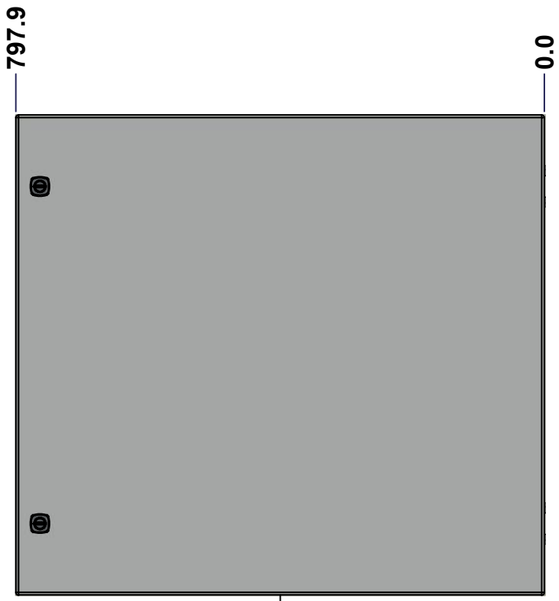

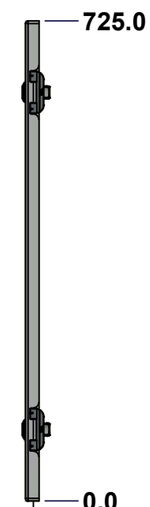

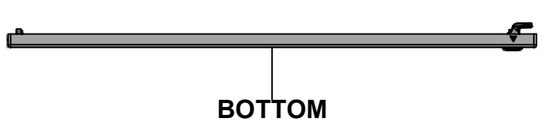

SEE BILL OF MATERIAL ON LAST PAGE

No.	Revisions	Date	By/Par

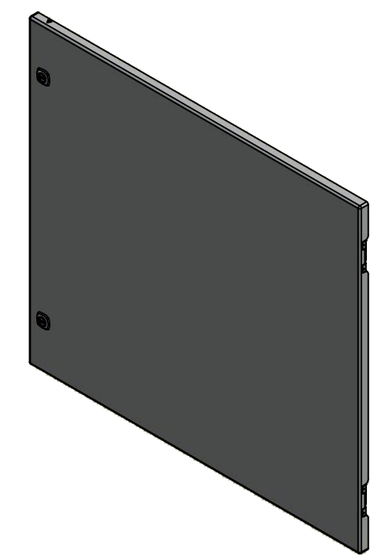

Isometric View

Tél: (450) 979-4373
Fax: (450) 979-4626
www.exmweb.com

Flatness / Aplatissement: Max 3.0mm

Projection

Customer / Client		Date	
Drawn By / Dessiné Par	BoxCad: BoxCad	Date	11/4/2014
Material / Matière	14 Ga Cold Rolled A1008 CS Type B (1.7mm)		
Color / Couleur	Light Grey RAL7035	Finish / Fini	Rough Textured
Description	6500CO 1000mm x 800mmFront Cover	Detail Rev.	
Part Number / Numéro Pièce	**6500CO0804FD**	Rev.	**0**

This drawing is confidential and must not be reproduced or used without the consent of EXM

Ce dessin est confidentiel et ne doit pas être reproduit ou utilisé sans le consentement de EXM

STANDARD FEATURES ARE NOT LISTED IN THIS HOLE TABLE

HOLE TABLE - FRONT VIEW (CUSTOM FEATURE ONLY)

CUT-OUT	XDIM	YDIM	DESCRIPTION
1	40.0	35.0	GND STUD M6 x 16mm (Inside)
2	761.7	617.0	LOCK 880 SCQ4-SL @ 180.0°
3	761.7	108.0	LOCK 880 SCQ4-SL @ 180.0°

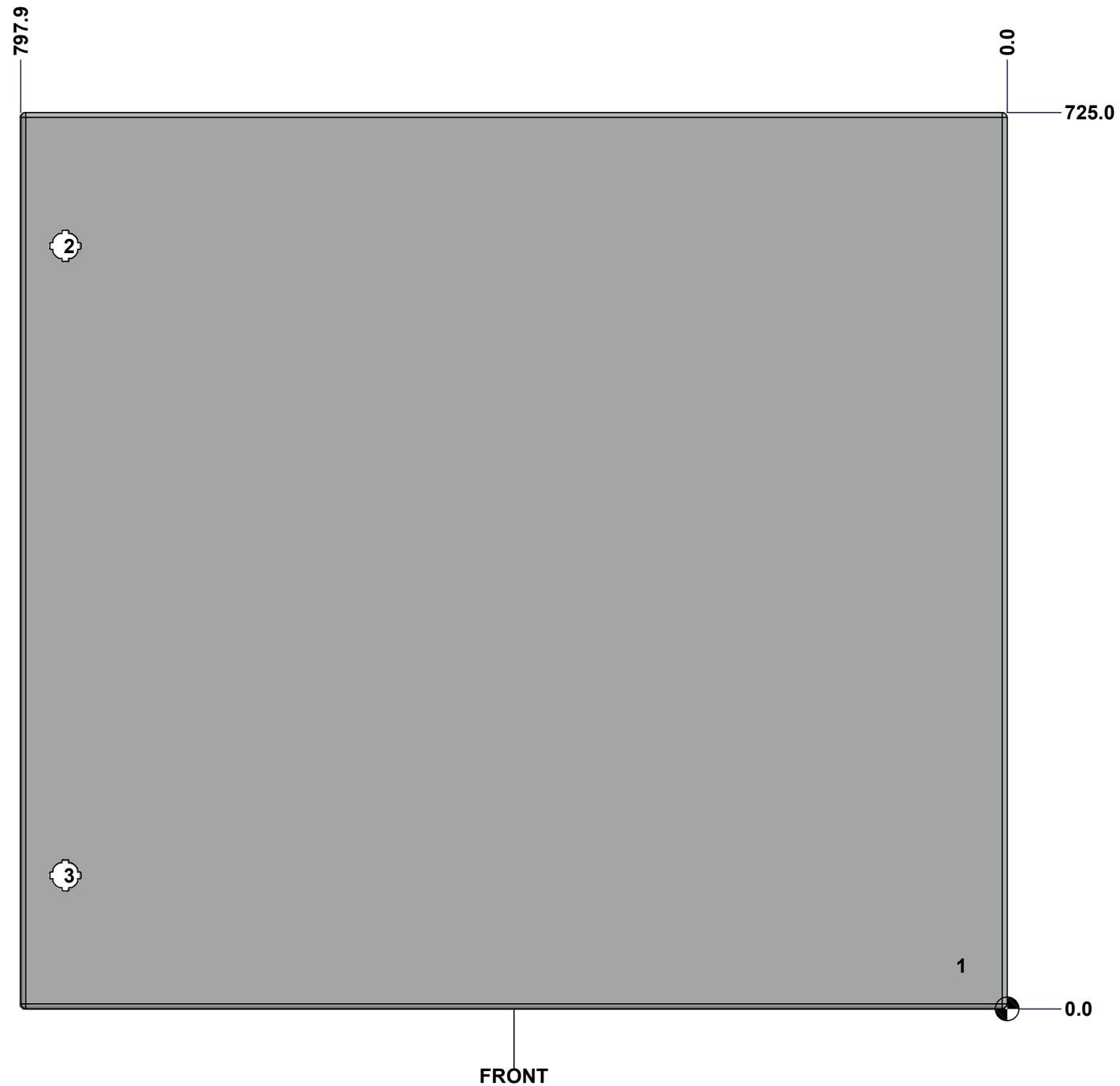

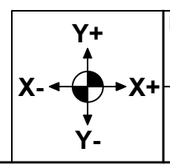

Description	Status
6500CO 1000mm x 800mm Front Cover	(NULL)
Part Number / Numéro Pièce: **6500CO0804FD**	Rev. **0**

13 / 17

Tolerance ±0.8mm unless otherwise specified

C:\Vault_Workspace\Inventor_Dwg\BoxCad\Result\6500CO0804\6500CO0804.idw

Tolérance ±0.8mm sauf spécification contraire

This drawing is confidential and must not be reproduced or used without the consent of EXM

Ce dessin est confidentiel et ne doit pas être reproduit ou utilisé sans le consentement de EXM

No.	Revisions	Date	By/Par

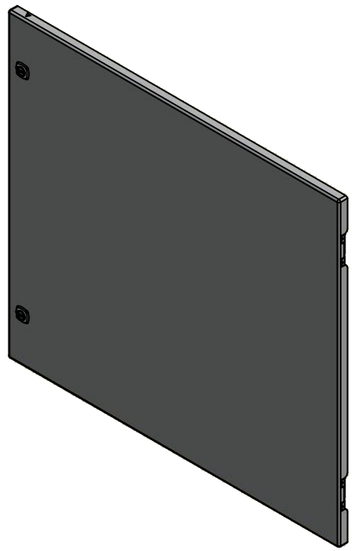

Isometric View

Tél: (450) 979-4373
Fax: (450) 979-4626
www.exmweb.com

Flatness
Aplatissement
Max 3.0mm

Projection

Customer Client		Date	
Drawn By Dessiné Par	BoxCad: BoxCad	Date	11/4/2014
Material Matière	14 Ga Cold Rolled A1008 CS Type B (1.7mm)		
Color Couleur	Light Grey RAL7035	Finish Fini	Rough Textured
Description 6500CO 1000mm x 800mmFront Cover		Detail Rev.	
Part Number Numéro Pièce **6500CO0804FD**		Rev. **0**	14 / 17

Parts List

Qty	Part Number	Rev	Description
1	STK-Q-16080	0	Ground Stud M6 x 16mm
1	STK-P-03820R	0	Powder Paint (Light Grey / Rough Textured)
1	6500CO0804FD-P	0	6500CO 1000mm x 800mm Front Cover Part
1	6500CO0804FD-G	0	6500CO 1000mm x 800mm Front Cover Gasket
2	STK-K-09800	10	5412 ES Hinge with 2 Captive Hinge Pins
2	880 SCQ4-SL	6	5412 ES 1/4 Turn Lock

Tolerance ±0.8mm unless otherwise specified

C:\Vault_Workspace\Inventor_Dwg\BoxCad\Result\6500CO0804\6500CO0804.idw

Tolérance ±0.8mm sauf spécification contraire

This drawing is confidential and must not be reproduced or used without the consent of EXM

Ce dessin est confidentiel et ne doit pas être reproduit ou utilisé sans le consentement de EXM

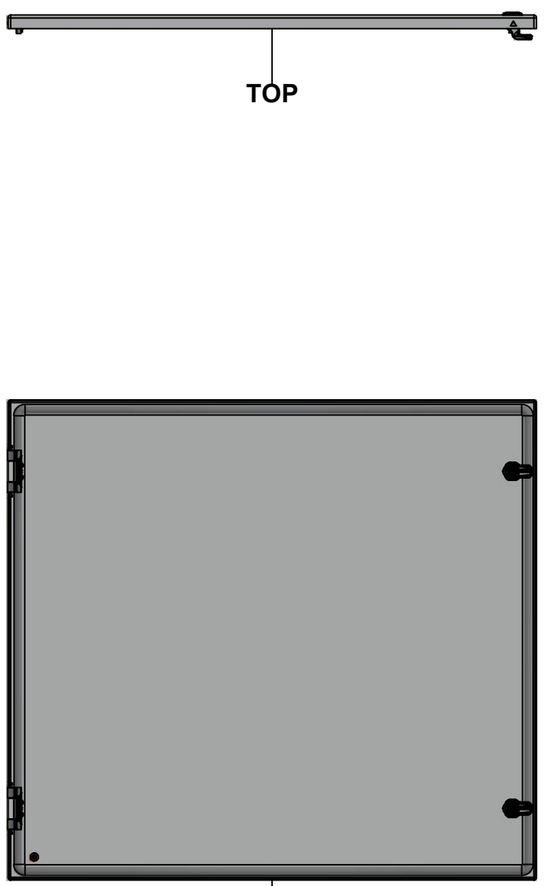

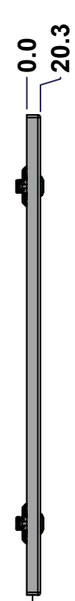

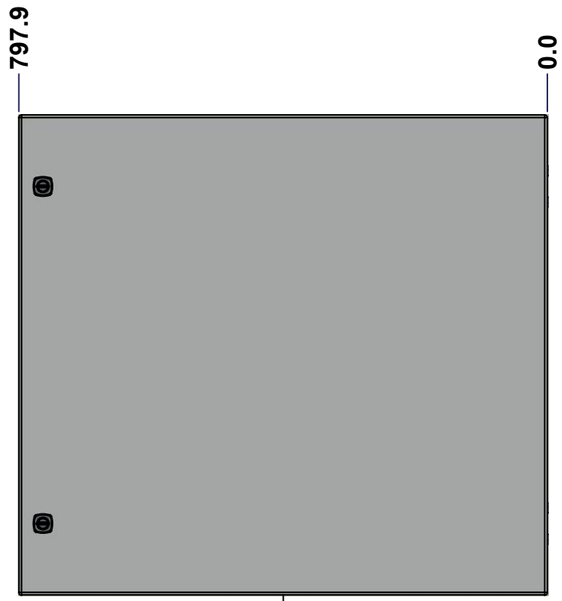

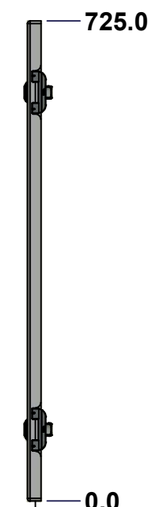

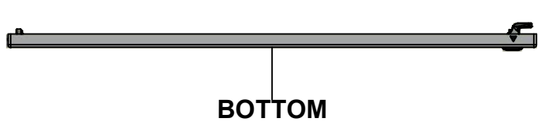

SEE BILL OF MATERIAL ON LAST PAGE

No.	Revisions	Date	By/Par

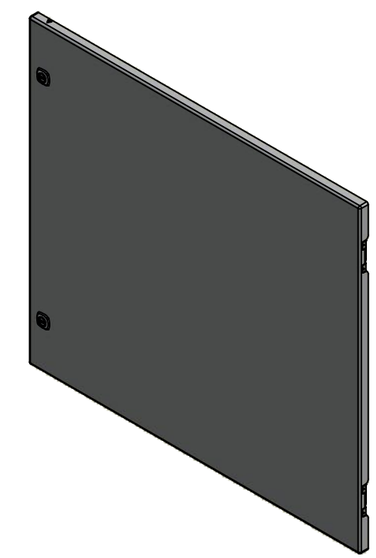

Isometric View

Tél: (450) 979-4373
Fax: (450) 979-4626
www.exmweb.com

Flatness / Aplatissement: Max 3.0mm

Projection

Customer / Client		Date	
Drawn By / Dessiné Par	BoxCad: BoxCad	Date	11/4/2014
Material / Matière	14 Ga Cold Rolled A1008 CS Type B (1.7mm)		
Color / Couleur	Light Grey RAL7035	Finish / Fini	Rough Textured
Description	6500CO 1000mm x 800mm Back Cover	Detail Rev.	
Part Number / Numéro Pièce	**6500CO0804BD**	Rev.	**0**

15 / 17

This drawing is confidential and must not be reproduced or used without the consent of EXM

Ce dessin est confidentiel et ne doit pas être reproduit ou utilisé sans le consentement de EXM

STANDARD FEATURES ARE NOT LISTED IN THIS HOLE TABLE

HOLE TABLE - FRONT VIEW (CUSTOM FEATURE ONLY)

CUT-OUT	XDIM	YDIM	DESCRIPTION
1	40.0	35.0	GND STUD M6 x 16mm (Inside)
2	761.7	617.0	LOCK 880 SCQ4-SL @ 180.0°
3	761.7	108.0	LOCK 880 SCQ4-SL @ 180.0°

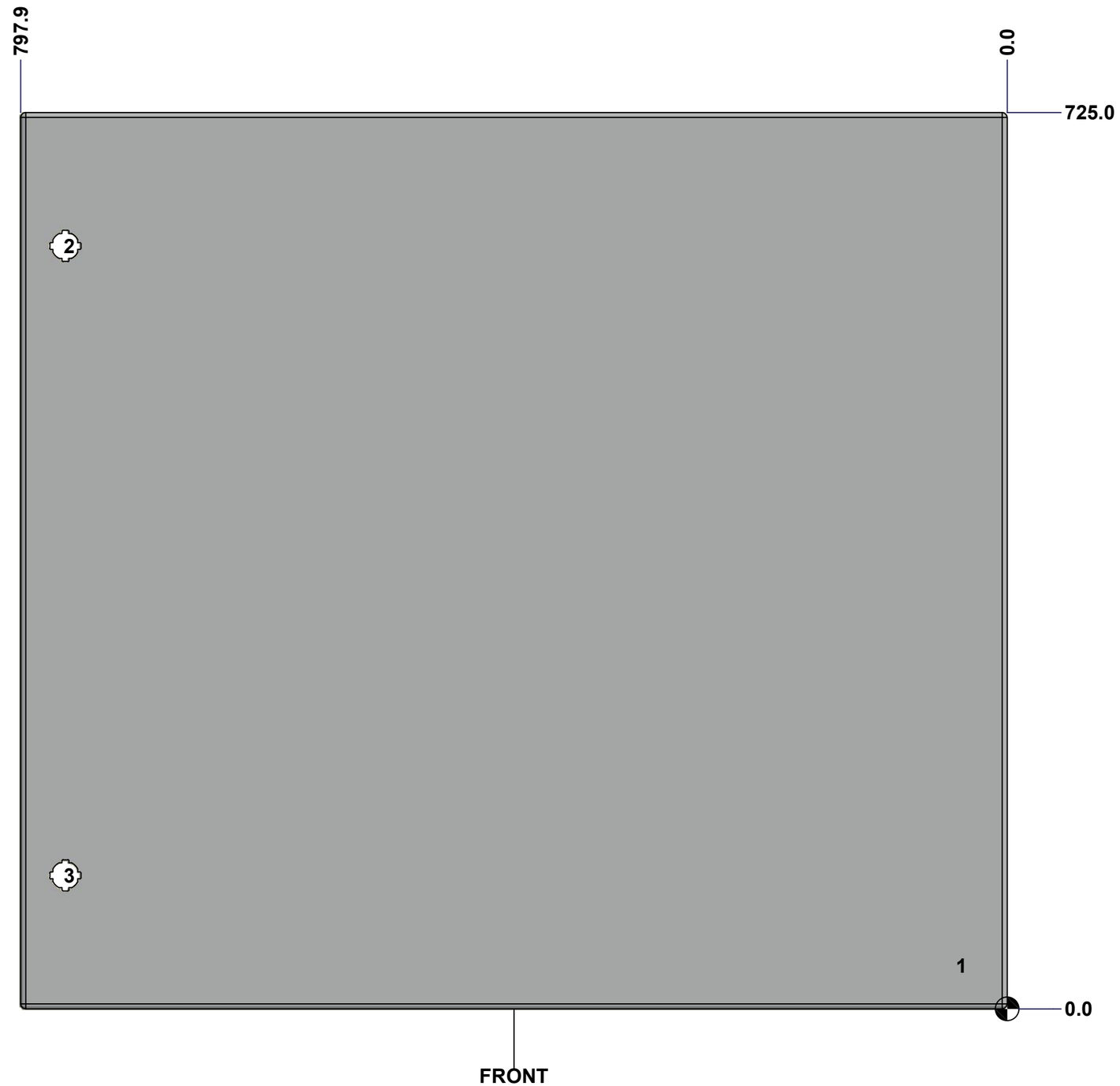

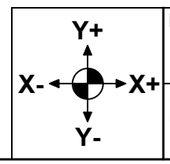

Description	Status
6500CO 1000mm x 800mm Back Cover	(NULL)
Part Number / Numéro Pièce: **6500CO0804BD**	Rev. **0**

Tolerance ±0.8mm unless otherwise specified

C:\Vault_Workspace\Inventor_Dwg\BoxCad\Result\6500CO0804\6500CO0804.idw

Tolérance ±0.8mm sauf spécification contraire

This drawing is confidential and must not be reproduced or used without the consent of EXM

Ce dessin est confidentiel et ne doit pas être reproduit ou utilisé sans le consentement de EXM

No.	Revisions	Date	By/Par

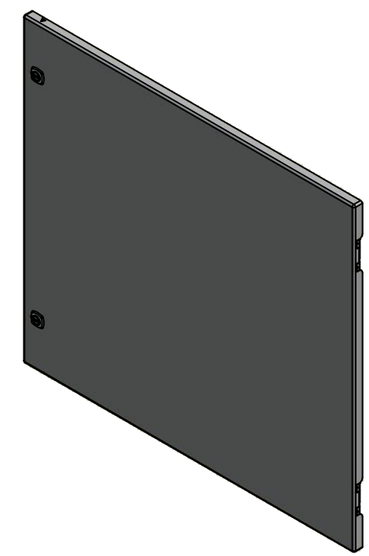

Isometric View

Tél: (450) 979-4373
Fax: (450) 979-4626
www.exmweb.com

Flatness
Aplatissement
Max 3.0mm

Projection

Customer Client		Date	
Drawn By Dessiné Par	BoxCad: BoxCad	Date	11/4/2014
Material Matière	14 Ga Cold Rolled A1008 CS Type B (1.7mm)		
Color Couleur	Light Grey RAL7035	Finish Fini	Rough Textured
Description 6500CO 1000mm x 800mm Back Cover		Detail Rev.	
Part Number Numéro Pièce **6500CO0804BD**		Rev. **0**	17 / 17

Parts List

Qty	Part Number	Rev	Description
1	STK-Q-16080	0	Ground Stud M6 x 16mm
1	STK-P-03820R	0	Powder Paint (Light Grey / Rough Textured)
1	6500CO0804BD-P	0	6500CO 1000mm x 800mm Back Cover Part
1	6500CO0804BD-G	0	6500CO 1000mm x 800mm Back Cover Gasket
2	STK-K-09800	10	5412 ES Hinge with 2 Captive Hinge Pins
2	880 SCQ4-SL	6	5412 ES 1/4 Turn Lock

This drawing is confidential and must not be reproduced or used without the consent of EXM

Ce dessin est confidentiel et ne doit pas être reproduit ou utilisé sans le consentement de EXM

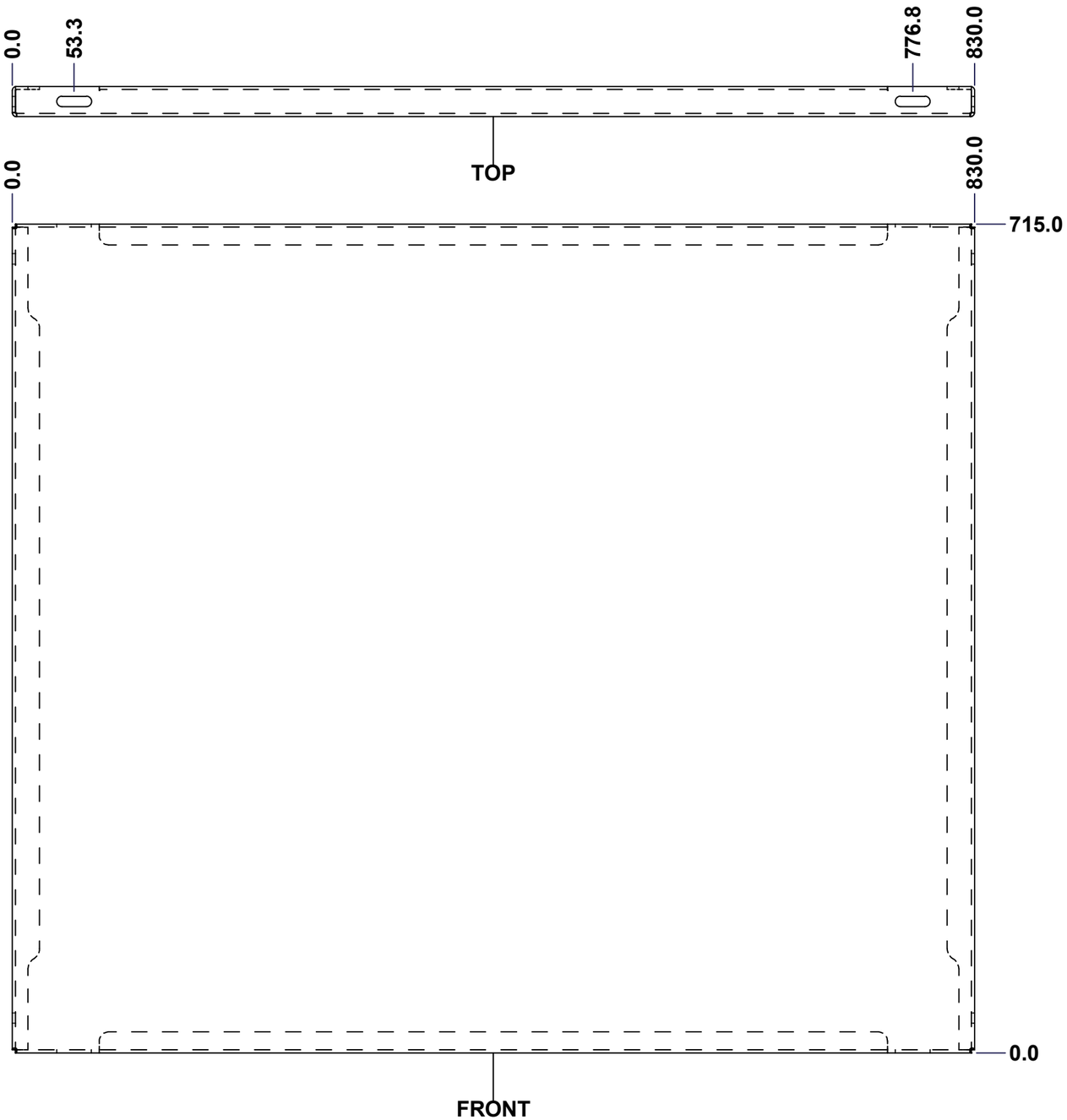

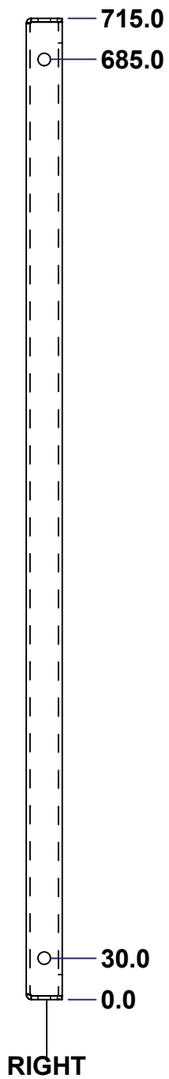

No.	Revisions	Date	By/Par

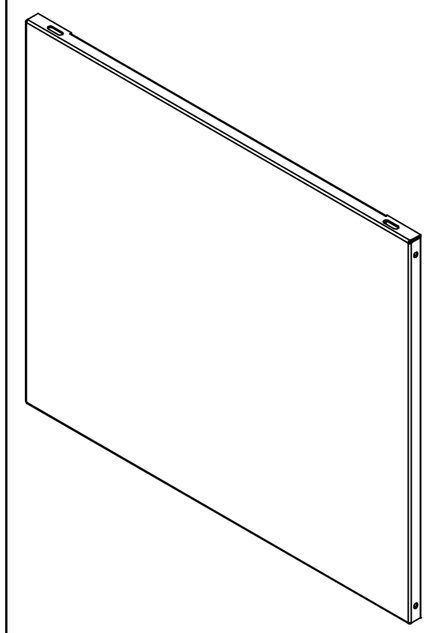

Isometric View

Qty	Part Number	Rev	Description	Material	Color	Finish
1				12 Ga Galvanized	Galvanized	Galvanized
1	STK-P-02401S	0	Powder Paint (White / Smooth)	Polyester-Epoxy Hybrid	White RAL9003	Smooth

Parts List

Tél: (450) 979-4373
Fax: (450) 979-4626
www.exmweb.com

Flatness / Aplatissement: Max 3.0mm

Projection

Customer / Client:

Date:

Drawn By / Dessiné Par: BoxCad

Date: 1/23/2007

Material / Matière: See Part List

Color / Couleur: See Part List

Finish / Fini: See Part List

Description: 886 SP - Inner Panel

Detail Rev.:

Part Number / Numéro Pièce: **886SP0800CO**

Rev.: **0**

1 / 2

Tolerance ±0.8mm unless otherwise specified

C:\Vault_Workspace\Inventor_Dwg\Inv-8\886SPCO\886SP0800CO.idw

Tolérance ±0.8mm sauf spécification contraire

This drawing is confidential and must not be reproduced or used without the consent of EXM

Ce dessin est confidentiel et ne doit pas être reproduit ou utilisé sans le consentement de EXM

Table 1			FRONT VIEW
CUT-OUT	XDIM	YDIM	DESCRIPTION

All knockouts are actual size / Les disques défonçables sont grandeur réel

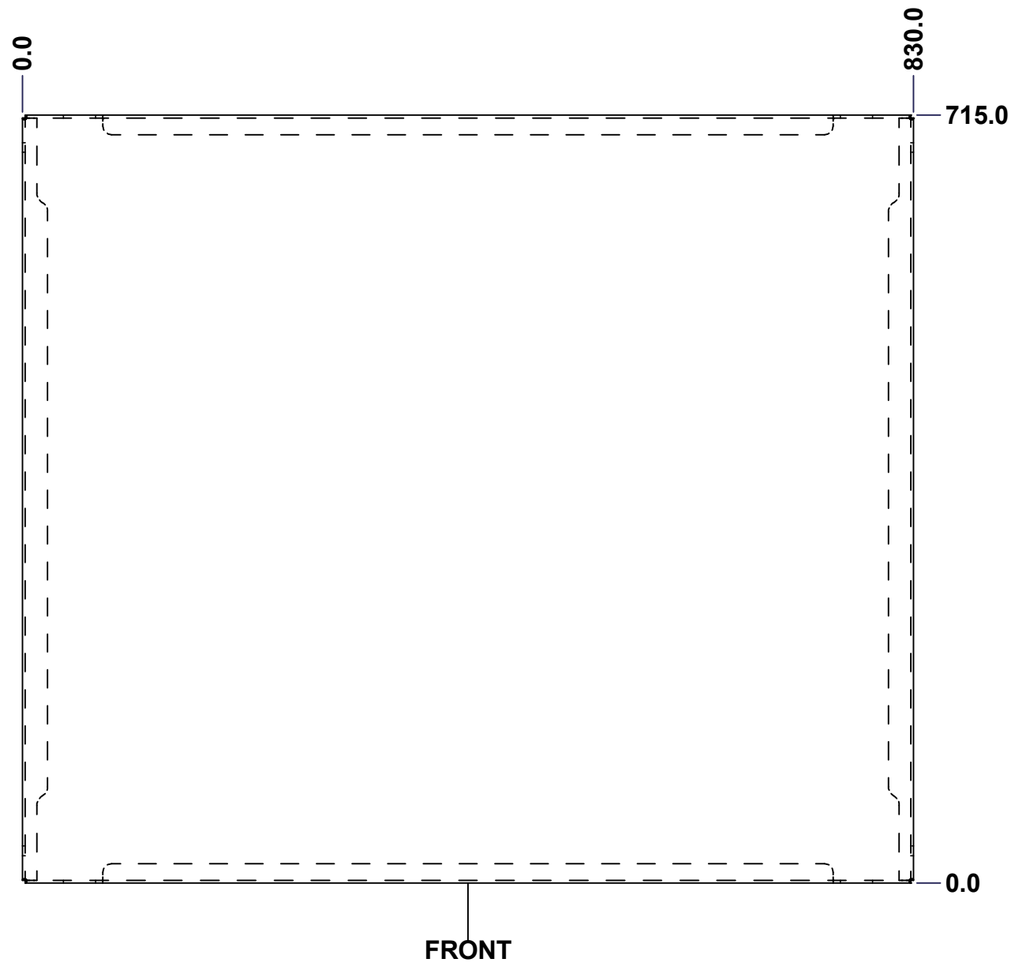

No.	Revisions	Date	By/Par

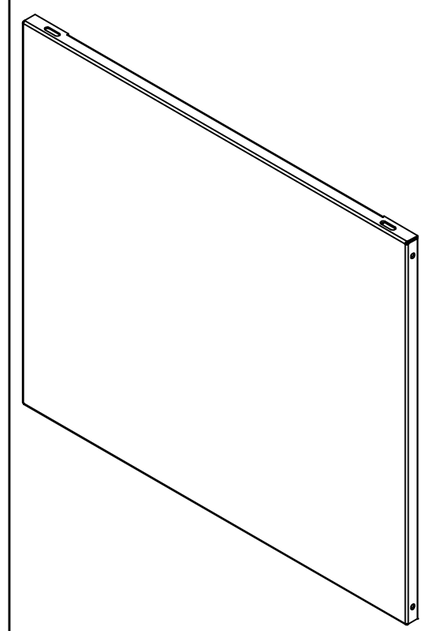

Isometric View

Tél: (450) 979-4373
Fax: (450) 979-4626
www.exmweb.com

Flatness / Aplatissement: Max 3.0mm

Projection

Customer / Client		Date	
Drawn By / Dessiné Par	BoxCad	Date	1/23/2007
Material / Matière	See Part List		
Color / Couleur	See Part List	Finish / Fini	See Part List
Description	886 SP - Inner Panel	Detail Rev.	
Part Number / Numéro Pièce	886SP0800CO	Rev. 0	2 / 2